PLANS FOR:

EAST MAIN STREET ROADWAY IMPROVEMENT PROJECT

IN THE

CITY OF ANSONIA, CONNECTICUT

APRIL 1, 2021

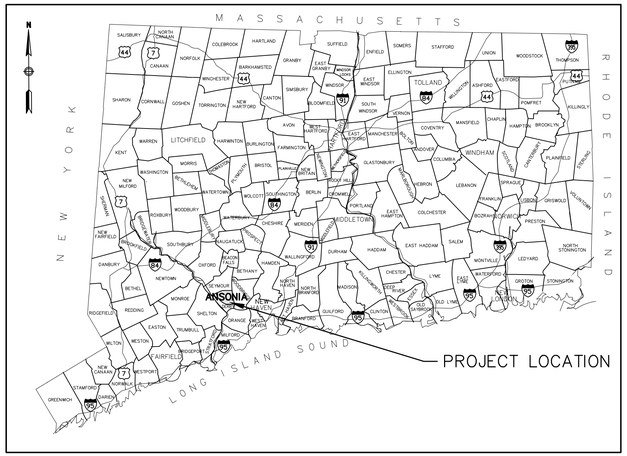

LOCATION MAP

PROJECT ROADWAY MAP

MAYOR
HONORABLE DAVID S. CASSETTI

ECONOMIC DEVELOPMENT DIRECTOR
SHEILA O'MALLEY

LIST OF ROADWAYS

STREET NAME	BEGIN STREET	END STREET	ROADWAY CLASSIFICATION	ROADWAY LENGTH	AVERAGE DAILY TRAFFIC	DESIGN SPEED
EAST MAIN STREET	KINGSTON DRIVE	MAIN STREET	LOCAL	1100 LF	N/A	30 MPH

DWG. NO.	TITLE	SHEET NO.
TLS-1	TITLE SHEET	01
GNA-1	LEGEND, ABBREVIATIONS, & GENERAL NOTES	02
MDS-1 TO MDS-3	MISCELLANEOUS DETAILS	03-05
TYP-1	TYPICAL SECTIONS	06
EXT-1	EXISTING CONDITIONS PLAN	07
PLN-1	CONSTRUCTION PLAN	08
LTG-1	LIGHTING PLAN	09

LIST OF CTDOT STANDARD DRAWINGS

DWG. NO.	TITLE	SHEET NO.
HW_INX_01	HIGHWAY STANDARD SHEET INDEX	10
HW_INX_02	HIGHWAY STANDARD SHEET INDEX	11
HW-286_01	DRAINAGE TRENCH EXCAVATION	12
HW-586_01	CATCH BASIN AND DROP INLET TYPES "C" AND "C-L"	13
HW-586_07	CATCH BASIN TOPS TYPE "C" AND "C-L"	14
HW-586_08	CATCH BASIN FRAMES AND GRATES	15
HW-813_02	STONE CURBING	16
HW-913_01a	CHAIN LINK FENCE	17
HW-913_01b	CHAIN LINK FENCE HARDWARE	18
HW-921_01	DRIVEWAY RAMPS AND SIDEWALKS	19
HW-949_01a	LANDSCAPE PLANTING	20
TR-STD_INDEX	TRAFFIC STANDARD SHEET INDEX	21
TR-1001_01	TRENCHING AND BACKFILLING - ELECTRICAL CONDUIT	22
TR-1208_01	SIGN PLACEMENT AND RETROREFLECTIVE STRIP DETAILS	23
TR-1208_02	METAL SIGN POSTS AND SIGN MOUNTING DETAILS	24
TR-1210_04	PAVEMENT MARKINGS, LINES, AND SYMBOLS	25
TR-1210_08	PAVEMENT MARKINGS ON NON FREEWAYS	26
TR-1220_01	SIGNS FOR CONSTRUCTION AND PERMIT OPERATIONS	27
TR-1220_02	CONSTRUCTION SIGN SUPPORTS AND CHANNELIZING DEVICES	28

DEVELOPED FOR:

CITY OF ANSONIA
PUBLIC WORKS DEPARTMENT

North Division Street
Ansonia, CT, 06401

DEVELOPED BY:

vhb

100 Great Meadow Road, Suite 200
Wethersfield, Connecticut 06109
860-807-4300 - FAX 860-372-4570

BID SET

STATE OF CONNECTICUT
BILL A. ANDERSON
No. 25326
LICENSED
PROFESSIONAL ENGINEER

2020 SPECIFICATIONS, FORM 818 AND ALL LATEST SUPPLEMENTAL SPECIFICATIONS THERETO GOVERN.

VHB Project No. 42307.00
East Main Street - Ansonia, CT
Issued for: Issued for Construction

LEGEND

- CATCH BASIN
- RD ROOF DRAIN
- DRAIN MANHOLE
- SEWER MANHOLE
- ELECTRIC MANHOLE
- TELEPHONE MANHOLE
- MANHOLE
- WATER MANHOLE
- GATE BOX (WATER)
- FIRE HYDRANT
- GATE BOX (GAS)
- STREET SIGN
- TEST PIT
- LIGHT POLE
- UTILITY POLE
- UTILITY POLE W/LIGHT
- GUY POLE OR WIRE
- BOLLARD/POST
- 100.0 × SPOT ELEVATION
- MB MAILBOX
- V VAULT
- TRAVERSE POINT
- SHRUBS
- DECIDUOUS TREE
- EVERGREEN TREE
- DRAINAGE EASEMENT
- EDGE OF PAVEMENT
- EDGE OF GRAVEL
- EDGE OF TRAVELED WAY
- CURB
- STEEL GUIDE RAIL
- BARBED WIRE FENCE
- CHAIN LINK FENCE
- WOOD FENCE
- UNDERGROUND DRAINAGE LINE
- UNDERGROUND SEWER LINE
- OVERHEAD WIRE
- UNDERGROUND ELECTRIC LINE
- UNDERGROUND GAS LINE
- UNDERGROUND WATER LINE
- UNDERGROUND TELEPHONE LINE
- UD TREE LINE
- UNDERDRAIN
- LIMIT OF WORK
- PROPERTY LINE

ABBREVIATIONS

ACR	ACCESSIBLE CURB RAMP
ADBE	AS DIRECTED BY ENGINEER
AOBE	AS ORDERED BY ENGINEER
℄	BASELINE
BB	BITUMINOUS BERM
BC/BCLC	BITUMINOUS CURB
BIT	BITUMINOUS
BOC	BACK OF CURB
BOW	BACK OF WALK
BWL	BROKEN WHITE LINE
BYL	BROKEN YELLOW LINE
CB	CATCH BASIN
CC	CONCRETE CURB
CLF	CHAIN LINK FENCE
CCM	CORRUGATED METAL PIPE
COMM	COMMERCIAL
CONC	CONCRETE
CPP	CORRUGATED PLASTIC PIPE
D	DRAIN LINE
DBL	DOUBLE
DIP	DUCTILE IRON PIPE
DMH	DRAIN MANHOLE
DWG	DRAWING
DWY	DRIVEWAY
DYL	DOUBLE YELLOW LINE
E	ELECTRIC LINE
ELEV.	ELEVATION
EMH	ELECTRIC MANHOLE
EP	EDGE OF PAVEMENT
EX\EXIST	EXISTING
FA	FIRE ALARM
FES	FLARED END SECTION
F.F.E.	FINISH FLOOR ELEVATION
FL	FLOW LINE
FOC	FACE OF CURB
G	GAS LINE
GG	GATE BOX (GAS)
GTD	GRADE TO DRAIN
HMA	HOT MIX ASPHALT
HYD	HYDRANT
INV=/I=	INVERT ELEVATION
INT	INTERMEDIATE
LT	LEFT
MH	MANHOLE
MW	MONITORING WELL
O/H	OVERHEAD
OHW	OVERHEAD LINE
ℙ	PROPERTY LINE
PED	PEDESTRIAN
PERP	PERPENDICULAR
PGL	PROFILE GRADE LINE
PIV	POST INDICATOR VALVE
PVC	POLYVINYLCHLORIDE PIPE
R	RADIUS
RCP	REINFORCED CONCRETE PIPE
RES	RESIDENTIAL
RIM=/R=	RIM ELEVATION
ROW	RIGHT OF WAY
RT	RIGHT
S	SEWER LINE
SB	STREET BOUND
SCE	SLOPED CONCRETE EDGING
SCC	SLOPED CONCRETE CURB
SGE	SLOPED GRANITE EDGING
SMH	SEWER MANHOLE
STA	STATION
SWK	SIDEWALK
SWL	SINGLE WHITE LINE
SYL	SINGLE YELLOW LINE
T	TELEPHONE LINE
TMH	TELEPHONE MANHOLE
TP	TEST PIT
TYP	TYPICAL
UP	UTILITY POLE
VC	VITRIFIED CLAY PIPE
VGC	VERTICAL GRANITE CURB
W	WATER LINE
WG	GATE BOX (WATER)
WMH	WATER MANHOLE

MAINTENANCE & PROTECTION OF TRAFFIC NOTES:

1. THE CONTRACTOR SHALL MAINTAIN LOCAL ACCESS ALONG ALL PROJECT ROADWAYS ON A TRAVEL PATH NOT LESS THAN 12 FEET IN WIDTH. ALTERNATING ONE WAY TRAFFIC SHALL BE ALLOWED ON ROADWAYS WHERE TWO, OPPOSING, 11 FOOT LANES ARE NOT AVAILABLE. AT THE COMPLETION OF THE WORKDAY, THE CONTRACTOR SHALL RESTORE THE ROADWAY TO NORMAL TRAFFIC OPERATIONS.
2. THE CONTRACTOR SHALL POST A SIGN AT THE BEGINNING OF CONSTRUCTION ZONE WHICH SHALL READ AS FOLLOWS: "ROAD WORK AHEAD FINES DOUBLED", AND AT THE END OF SUCH ZONE WHICH SHALL READ AS FOLLOWS: "END ROAD WORK".

UNDERGROUND UTILITY NOTES:

1. THE CONTRACTOR SHALL CONTACT "CALL BEFORE YOU DIG" AT 1-800-922-4455 A MINIMUM OF 72-HOURS PRIOR TO ANY EXCAVATION BEING PERFORMED ON SITE.
2. THE LOCATIONS, SIZES, AND TYPES OF EXISTING UTILITIES SHOWN ON THIS PLAN ARE BASED ON FIELD OBSERVATIONS AND INFORMATION OF RECORD AND ARE AN APPROXIMATE REPRESENTATION ONLY. THE OWNER OR ITS REPRESENTATIVE(S) HAVE NOT INDEPENDENTLY VERIFIED THIS INFORMATION AS SHOWN ON THE PLANS. EXISTING UTILITIES ARE NOT GUARANTEED TO BE EXACTLY LOCATED, NOR IS IT GUARANTEED THAT ALL UNDERGROUND/OVERHEAD UTILITIES OR OTHER STRUCTURES ARE SHOWN ON THIS PLAN.
3. SEVERAL UNDERGROUND UTILITIES WITHIN THE PROJECT LIMITS EXIST AT SHALLOW DEPTHS. THE CONTRACTOR SHALL TAKE PROPER PRECAUTIONS WHEN EXCAVATING IN AREAS IDENTIFIED BY "CALL BEFORE YOU DIG".
4. PRIOR TO ORDERING MATERIALS AND BEGINNING CONSTRUCTION, THE CONTRACTOR SHALL DETERMINE THE EXACT LOCATION OF ALL EXISTING UTILITIES AND DETERMINE THE EXACT LOCATIONS, SIZES, AND ELEVATIONS OF THE POINTS OF CONNECTIONS TO EXISTING UTILITIES. THE CONTRACTOR SHALL CONFIRM THAT THERE IS NO INTERFERENCE BETWEEN EXISTING UTILITIES AND THE PROPOSED UTILITY ROUTES. THE CONTRACTOR AGREES TO BE FULLY RESPONSIBLE FOR ANY AND ALL DAMAGES WHICH MIGHT BE OCCASIONED BY THE CONTRACTOR'S FAILURE TO EXACTLY LOCATE AND PRESERVE ANY AND ALL UNDERGROUND UTILITIES.
5. BUILDING SERVICE CONNECTIONS (ELECTRIC, GAS, TELEPHONE, WATER, AND SANITARY) ARE SHOWN WHEREVER POSSIBLE. THE CONTRACTOR IS TO ASSUME THAT SERVICES ARE PRESENT TO ALL BUILDINGS. THE LOCATIONS AND DEPTHS OF ALL BUILDING SERVICE CONNECTIONS ARE TO BE CHECKED WITH THE APPROPRIATE UTILITY COMPANIES.
6. PRIOR TO THE START OF CONSTRUCTION, TEST PITS SHOULD BE DUG AS NECESSARY TO DETERMINE THE SIZES, LOCATIONS, AND DEPTHS OF EXISTING UNDERGROUND UTILITIES. ANY CONFLICTS NOTED IN PROPOSED CONSTRUCTION SHALL IMMEDIATELY BE BROUGHT TO THE ATTENTION OF THE ENGINEER. THE CONTRACTOR'S FAILURE TO NOTIFY THE ENGINEER PRIOR TO PERFORMING ADDITIONAL WORK RELEASES THE OWNER FROM OBLIGATIONS FOR ADDITIONAL PAYMENTS WHICH OTHERWISE MAY BE WARRANTED TO RESOLVE THE CONFLICT.
7. IN THE EVENT THE CONTRACTOR DAMAGES AN EXISTING UTILITY SERVICE CAUSING AN INTERRUPTION IN SAID SERVICE, THE CONTRACTOR SHALL IMMEDIATELY CONTACT THE AFFECTED UTILITY, COORDINATE REPAIRS, AND PERFORM THE WORK AS DETAILED BY THE UTILITY AS NEEDED TO RESTORE SERVICE AT NO ADDITIONAL COST TO THE OWNER. THE CONTRACTOR SHALL NOT CONTINUE WITH OTHER WORK OPERATIONS UNTIL THE UTILITY SERVICE IS RESTORED.

GENERAL CONSTRUCTION NOTES:

1. UPON THE AWARD OF THE CONTRACT, THE CONTRACTOR SHALL MAKE NECESSARY CONSTRUCTION NOTIFICATIONS, APPLY FOR AND OBTAIN NECESSARY PERMITS, PAY ALL FEES, AND POST ALL BONDS ASSOCIATED WITH THE WORK INDICATED ON THE DRAWINGS, IN THE SPECIFICATIONS, AND IN THE CONTRACT DOCUMENTS. THE CONTRACTOR MUST ALSO APPLY AND OBTAIN AN ENCROACHMENT PERMIT PRIOR TO PERFORMING ANY WORK WITHIN STATE RIGHT-OF-WAY. ALL COSTS ASSOCIATED WITH OBTAINING PERMITS SHALL BE INCLUDED IN THE OVERALL COSTS OF THE PROJECT.
2. ALL WORK SHALL BE PERFORMED IN CONFORMANCE WITH THE CONDITIONS OF APPROVAL OUTLINED IN ALL STATE AND LOCAL PERMITS. THE CONTRACTOR SHALL BE RESPONSIBLE FOR REVIEWING THIS INFORMATION PRIOR TO CONSTRUCTION AND FOR CONFORMING TO THE CONDITIONS AS REQUIRED DURING CONSTRUCTION.
3. HANDICAP-ACCESSIBLE ROUTES, PARKING SPACES, RAMPS, SIDEWALKS, AND WALKWAYS SHALL BE CONSTRUCTED IN CONFORMANCE WITH THE FEDERAL AMERICANS WITH DISABILITIES ACT AND WITH STATE AND LOCAL LAWS AND REGULATIONS (WHICHEVER ARE MORE STRINGENT).
4. ACCESS TO RESIDENCES AND BUSINESSES SHALL BE PROVIDED BY THE CONTRACTOR AT ALL TIMES DURING CONSTRUCTION AT NO ADDITIONAL COST TO THE TOWN. SPECIAL ATTENTION SHALL BE PAID TO COORDINATING WITH THE POLICE DEPARTMENT, EMERGENCY RESPONSE UNITS, AND CITY OFFICIALS.
5. THE CONTRACTOR SHALL BE RESPONSIBLE FOR SITE SECURITY AND JOB SAFETY. ALL CONSTRUCTION ACTIVITIES SHALL BE IN ACCORDANCE WITH OSHA STANDARDS AND LOCAL REQUIREMENTS.
6. IN ADDITION TO COMPLIANCE WITH CONSTRUCTION SAFETY REQUIREMENTS, THE CONTRACTOR SHALL TAKE ALL NECESSARY MEASURES AND PROVIDE ALL NECESSARY SIGNING, WARNING LIGHTS, DRUMS, CONES, AND CONTINUOUS BARRIERS OF SUFFICIENT TYPE, SIZE, AND STRENGTH TO PREVENT ACCESS TO ALL OPEN EXCAVATIONS AT THE COMPLETION OF EACH DAY'S WORK.
7. AREAS ALONG AND OUTSIDE THE LIMITS OF PROPOSED WORK DISTURBED BY THE CONTRACTOR'S OPERATIONS, INCLUDING ALL LANDSCAPED AREAS, DRIVEWAY CURB RETURNS, RETAINING WALLS, OR SIMILARLY IMPROVED ADJOINING AREAS, SHALL BE PROTECTED AND/OR RESTORED BY THE CONTRACTOR TO THEIR ORIGINAL CONDITION AT THE CONTRACTOR'S EXPENSE.
8. RESETTING OF STONE WALLS, WOOD WALLS, STONE STEPS, SLATE WALKS, AND OTHER SIMILAR ITEMS WITHIN THE LIMITS OF WORK SHALL BE PAID FOR UNDER THE GENERAL COST OF THE WORK.
9. REMOVAL OF EXISTING BITUMINOUS CONCRETE CURBING SHALL BE PAID FOR UNDER THE ITEM "EARTH EXCAVATION".
10. REMOVAL OF TREES AND STUMPS SHALL BE PAID FOR UNDER THE ITEM "CLEARING AND GRUBBING".
11. DAMAGE RESULTING FROM CONSTRUCTION LOADS SHALL BE REPAIRED BY THE CONTRACTOR AT NO ADDITIONAL COST TO OWNER.
12. THE CONTRACTOR SHALL PROTECT ALL STRUCTURES, EQUIPMENT, PIPING, AND VALVES FROM DAMAGE DURING CONSTRUCTION. ALL DAMAGE SHALL BE REPAIRED TO THE COMPLETE SATISFACTION OF THE ENGINEER AT NO ADDITIONAL COST TO THE OWNER.
13. THE CONTRACTOR SHALL ENSURE THAT ALL EXISTING U.S. MAIL BOXES OR RESIDENTIAL MAIL BOXES WITHIN THE PROJECT LIMITS MEET THE STANDARDS OF THE UNITED STATES POSTAL SERVICE AFTER CONSTRUCTION IS COMPLETE. THE COST TO RESET OR REPAIR MAIL BOXES SHALL BE COVERED UNDER THE ITEM "RESET MAILBOX".
14. THE CONTRACTOR SHALL BE RESPONSIBLE FOR ADJUSTING ALL STORM, SEWER, AND GAS UTILITIES UNCOVERED OR DISTURBED DURING CONSTRUCTION OPERATIONS. THE UNCOVERED OR DISTURBED UTILITIES SHALL BE ADJUSTED TO FINISHED GRADE ELEVATIONS. THIS WORK SHALL BE MEASURED AND PAID FOR UNDER THE APPLICABLE RESET ITEM. THE CONTRACTOR SHALL COORDINATE ADJUSTMENT OF ANY WATER, ELECTRICAL, TELEPHONE, OR CABLE FACILITIES WITH THE UTILITY OWNER.
15. THE CONTRACTOR SHALL BE RESPONSIBLE FOR SETTING CATCH BASIN FRAMES AND GRATES AND FOR PAVING THE ADJOINING ROADWAY TO PROVIDE POSITIVE GRADES TO DRAIN THE SURROUNDING AREA AS DIRECTED BY THE ENGINEER.
16. THE CONTRACTOR SHALL REMOVE ALL EXISTING PAVEMENT MARKINGS WHICH CONFLICT WITH PROPOSED PAVEMENT MARKINGS AND TRAFFIC SIGNAGE.
17. TRAFFIC SIGNAGE AND PAVEMENT MARKINGS SHALL CONFORM TO THE MANUAL OF UNIFORM TRAFFIC CONTROL DEVICES, LATEST EDITION.
18. THE FINAL LOCATION, LENGTHS, AND WIDTHS OF EACH DRIVEWAY MAY BE MODIFIED AS DIRECTED BY THE ENGINEER TO MEET FIELD CONDITIONS.
19. AREAS DISTURBED DURING CONSTRUCTION AND NOT RESTORED WITH IMPERVIOUS SURFACES (BUILDINGS, PAVEMENTS, WALKS, ETC.) SHALL RECEIVE 6" TOPSOIL AND TURF ESTABLISHMENT.
20. ALL TYPICAL SECTIONS SHOWN ON CONSTRUCTION PLANS ARE ORIENTED LOOKING FROM THE BEGINNING OF CONSTRUCTION TO THE END OF CONSTRUCTION, UNLESS SPECIFICALLY NOTED OTHERWISE.
21. THE CONTRACTOR IS ADVISED THAT ADDITIONAL "NOTES" WILL BE FOUND ON SUBSEQUENT SHEETS OF THE CONTRACT PLANS AND SUCH "NOTES," WHILE PERTAINING TO THE SPECIFIC DRAWINGS THEY ARE PLACED ON, ALSO SUPPLEMENT THE GENERAL NOTES LISTED HEREIN.
22. TRACKED VEHICLES AND OTHER EQUIPMENT ARE NOT ALLOWED ON BITUMINOUS CONCRETE OR OTHER PAVED ROADWAY SURFACES.
23. THE CONTRACTOR SHALL PROTECT LANDSCAPED AREAS WITHIN THE LIMITS OF WORK WHERE POSSIBLE. LANDSCAPED AREAS THAT ARE DISTURBED DUE TO CONSTRUCTION ACTIVITIES SHALL BE RESTORED. THE COST TO RESTORE LANDSCAPED AREAS SHALL BE INCLUDED IN THE GENERAL COST OF WORK.

DRAINAGE NOTES:

1. THE CONTRACTOR SHALL FIELD-VERIFY THE LOCATION, SIZE, INVERTS, AND TYPES OF EXISTING PIPES AT ALL PROPOSED POINTS OF CONNECTION PRIOR TO ORDERING MATERIALS. WHERE AN EXISTING UTILITY IS FOUND TO CONFLICT WITH THE PROPOSED WORK, THE LOCATION, ELEVATION, AND SIZE OF THE UTILITY SHALL BE ACCURATELY DETERMINED WITHOUT DELAY BY THE CONTRACTOR. THE INFORMATION SHALL BE FURNISHED IN WRITING TO THE ENGINEER FOR RESOLUTION OF THE CONFLICT.
2. ADJUST RIM ELEVATIONS OF MANHOLES, WATER GATES, GAS GATES AND ALL OTHER UTILITIES TO FINISHED GRADE WITHIN LIMITS OF WORK.
3. THE PROPOSED RIM ELEVATIONS FOR CATCH BASINS HAVE BEEN MEASURED AT THE PROPOSED FACE OF CURB (GUTTER LINE) FOR TYPE "C" CATCH BASINS AND AT THE CENTER OF THE GRATE FOR TYPE "C-L" CATCH BASINS. ALL PROPOSED RIM ELEVATIONS ACCOUNT FOR THE DEPRESSION SPECIFIED IN THE MISCELLANEOUS DETAILS WITH RESPECT TO PROPOSED ROADWAY GRADES AND CROSS SLOPES.
4. WHEN INSTALLING A NEW PIPE THAT REQUIRES A CONNECTION TO AN EXISTING PIPE, THE NEW PIPE CONNECTION SHALL BE MADE AT THE JOINT OF THE EXISTING PIPE NEAREST TO THE PROPOSED PIPE.
5. WHEN INSTALLING A NEW CATCH BASIN THAT REQUIRES A CONNECTION TO AN EXISTING PIPE, THE SECTION OF THE EXISTING PIPE DISTURBED BY CONSTRUCTION SHALL BE REPLACED WITH NEW PIPE OF SIMILAR SIZE AND TYPE EXTENDING FROM THE CATCH BASIN TO THE NEAREST JOINT OF EXISTING PIPE OR AS DIRECTED BY THE ENGINEER.
6. ALL CATCH BASIN GRATES ARE TO BE TYPE "A."
7. THE CONTRACTOR SHALL SET CATCH BASIN FRAME AND GRATES TO PROVIDE POSITIVE DRAINAGE INTO THE STRUCTURE. THE CONTRACTOR IS ADVISED THAT THE CATCH BASIN FRAME ELEVATIONS PROVIDED ON THE PLANS INCLUDE ANY ADDITIONAL DEPRESSION REQUIRED PER THE CATCH BASIN DETAILS.

SURVEY NOTES:

1. THE PROPERTY LINES SHOWN ON THIS PLAN ARE APPROXIMATE LINES BASED ON MAPPING PROVIDED BY THE TOWN OF ANSONIA. VHB HAS NOT PERFORMED A FIELD SURVEY TO VERIFY THE PROPERTY LINES.
2. THE EXISTING CONDITIONS ARE BASED UPON AN ACTUAL ON-THE-GROUND INSTRUMENT SURVEY PERFORMED BY VHB IN AUGUST OF 2017. THE HORIZONTAL AND VERTICAL VALUES FOR THESE ROADWAYS ARE BASED ON CT NAD 1983 AND NAVD88 DATUMS.
3. THE CONTRACTOR SHALL HAVE A CONNECTICUT REGISTERED LAND SURVEYOR AVAILABLE TO RESET ANY MONUMENTS DISTURBED DURING CONSTRUCTION AT NO ADDITIONAL COST TO THE OWNER. A SURVEY SHALL BE PROVIDED BY THE CONTRACTOR TO ENSURE THE MONUMENTATION HAS BEEN RESET TO ITS ORIGINAL LOCATION.
4. THE CONTRACTOR IS ADVISED THAT SOME CONTROL POINTS SHOWN ON THE PLANS MAY BE LOCATED ON THE EXISTING PAVEMENT SURFACE OR WITHIN THE CONSTRUCTION LIMITS. THE CONTRACTOR IS RESPONSIBLE FOR REESTABLISHING THOSE CONTROL POINTS AFTER CONSTRUCTION IS COMPLETED ON THAT STREET.

EROSION AND SEDIMENTATION CONTROL NOTES:

1. THE CONTRACTOR SHALL CONTROL STORMWATER RUNOFF DURING CONSTRUCTION TO PREVENT ADVERSE IMPACTS TO OFF-SITE AREAS AND SHALL BE RESPONSIBLE TO REPAIR RESULTING DAMAGES, IF ANY, AT NO COST TO THE OWNER.
2. THE CONTRACTOR SHALL INSTALL 'SEDIMENTATION CONTROL SYSTEM AT CATCH BASIN' AT CATCH BASINS PRIOR TO THE BEGINNING OF WORK AT LOCATIONS INDICATED ON THE PLANS, AS REQUIRED, OR AS ORDERED BY THE ENGINEER.
3. THE CONTRACTOR MUST INSPECT AND MAINTAIN EROSION CONTROL MEASURES AND REMOVE SEDIMENT THEREFROM ON A WEEKLY BASIS AND WITHIN TWELVE HOURS AFTER EACH STORM EVENT AND DISPOSE OF SEDIMENTS IN ACCORDANCE WITH THE APPLICABLE SECTIONS OF THE SPECIFICATIONS.
4. THE CONTRACTOR SHALL BE FULLY RESPONSIBLE TO CONTROL CONSTRUCTION SUCH THAT SEDIMENTATION SHALL NOT AFFECT REGULATORY PROTECTED AREAS, WHETHER SUCH SEDIMENTATION IS CAUSED BY WATER, WIND, OR DIRECT DEPOSIT.
5. UPON COMPLETION OF CONSTRUCTION AND ESTABLISHMENT OF PERMANENT GROUND COVER, THE CONTRACTOR SHALL REMOVE AND DISPOSE OF EROSION CONTROL MEASURES AND SHALL CLEAN SEDIMENT AND DEBRIS FROM THE ENTIRE STORM DRAINAGE SYSTEM.
6. PRIOR TO STARTING ANY OTHER WORK ON THE SITE, THE CONTRACTOR SHALL NOTIFY APPROPRIATE AGENCIES AND INSTALL EROSION CONTROL MEASURES AS SHOWN ON THE PLANS AND AS IDENTIFIED IN FEDERAL, STATE, AND LOCAL APPROVAL DOCUMENTS PERTAINING TO THIS PROJECT.
7. THE CONTRACTOR SHALL PERFORM CONSTRUCTION SEQUENCING SUCH THAT EARTH MATERIALS ARE EXPOSED FOR A MINIMUM OF TIME BEFORE THEY ARE COVERED, SEEDED, OR OTHERWISE STABILIZED TO PREVENT EROSION.
8. PRIOR TO STARTING ANY WORK ON THE SITE, THE CONTRACTOR SHALL NOTIFY THE ANSONIA WETLAND AGENT AND SHALL INSTALL EROSION CONTROL MEASURES AS SHOWN ON THE PLANS. ADDITIONAL EROSION CONTROLS MAY BE REQUIRED AS DIRECTED BY THE WETLAND AGENT.

REV.	DATE	DESCRIPTION	SHEET. NO.
		REVISIONS	

DESIGNER: JRE
DRAFTER: JRE
CHECKED BY: BAA
APPROVED BY: SON

vhb Engineers Scientists Planners Designers

ISSUED FOR CONSTRUCTION DATE: APRIL, 2021

PROJECT TITLE: PEDESTRIAN ENHANCEMENT PROJECT ALONG PRINDLE AVENUE & ROUTE 243

CADD FILENAME: GNA-4230700.DWG

TOWN: ANSONIA, CONNECTICUT

DRAWING TITLE: GENERAL NOTES & ABBREVIATIONS

PROJECT NO.: 42214.01
DRAWING NO.: GNA-1
SHEET NO.: 02 OF 28

Apr 06, 2021

UI Standards, Installation Procedures for Underground-Fed Lighting (UI's Outdoor Lighting Program)

Prior to your construction, please contact UI's Construction Manager:

Tony Antonino	Bruce Beem	Bill Schubert
Anthony.Antonino@uilnet.com	bruce.beem@uilnet.com	william.schubert@uilnet.com
(203) 926-4697 – office	(203) 499-2657 – office	(203) 499-3781 – office
(203) 314-8178 – cell	(203) 535-7481 – cell	(203) 215-2966 – cell
East Haven	Easton	Orange
Hamden	Fairfield	Milford
New Haven	Trumbull	West Haven
North Haven	Bridgeport	Woodbridge
North Branford	Shelton	
	Stratford	
	Derby	
	Ansonia	

Customer's Responsibilities

1. Customer to provide UI with site drawing. UI Engineer will provide electrical trenching & wiring drawing.
2. The customer is responsible for supplying all material to the conduit system. UI will provide concrete bases to the customer to install. UI will provide and install all wire and lights.
3. Customer to install concrete bases that will be delivered to the site by UI.
4. Provide and install all 2" PVC (Schedule 40) and tag-lines to appropriate power source as shown on a UI electrical trenching and wiring drawing that will be provided by UI Engineer. Galvanized steel or concrete encased PVC is usually required under roadway and/or paved parking areas. This will be shown on UI's electrical trenching and wiring drawing. ***See UI Standard #21005 attached.***
5. An adapter male PVC 2" coupling is required to attach PVC to the concrete base. Duct tape is not acceptable. Concrete bases should be installed approximately 2" above final grade. ***See UI Standard #21005 attached.***
6. If riser poles are involved, the Customer is to provide necessary 2" galvanized steel conduit for **ALL** sections of the pole and associated material (standoff brackets, threadless weatherhead, "U" bolts, and lag bolts). Customer to install first ten feet of conduit, UI to install the remaining material (all provided by Customer). ***See UI Standard #18001 attached.***
7. Tag-lines must be a minimum of 400 lb test. Tag-lines should not be installed until all glue has dried in conduit. ***See UI Standard #21005 attached, Item J.***
8. Care must be taken when backfilling the trench. Many times PVC is crushed by backfill. *See* ***UI Standard #21005 attached, Items F & H.***
9. When stubbing conduit into an underground transformer or secondary pedestal, you must contact your Construction Manager for assistance in excavation and tag-line. ***See UI Standard #21005 attached, Item K.***
10. UI electrical trenching and wiring drawing (provided by UI Engineer) cannot be changed without the approval of the Underground Construction Manager.
11. All trenches and base installation **MUST** be inspected by UI's Underground Construction Manager **PRIOR** to back-filling.

In the event UI's equipment is damaged, the Customer/Developer will be held financially responsible for UI's damaged material. This includes bases, shafts, fixtures, transformers, etc. If the base studs are damaged, the studs cannot be repaired; the entire base must be replaced at the Customer/Developer's expense.

Should any problems be encountered during construction, please contact your Underground Construction Manager.

Revised June 6, 2020:sp

LIGHT THE NIGHT INSTALLATION PROCEDURES
N.T.S

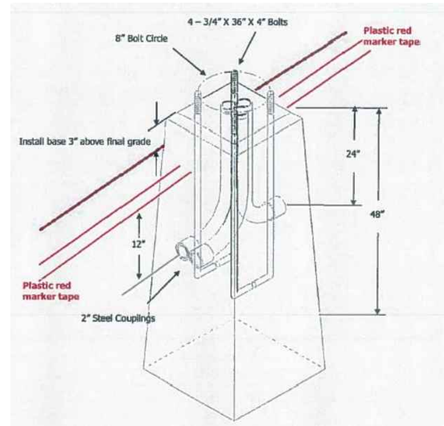

Notes:
1. Concrete base weighs 1250 lbs.
2. Base – UI Code 7810170, per UI Specification B-09
3. Marker on tape "CAUTION ELECTRIC LINE BURIED BELOW".

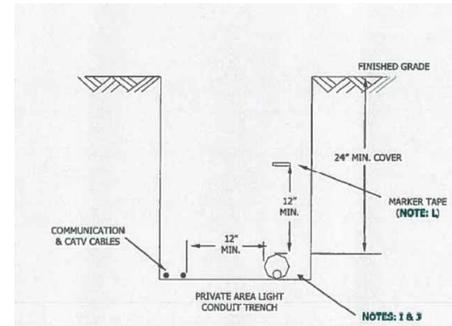

* Size as Required
Required

* * Quantity as

LIST OF MATERIALS				
ITEM	QTY.	SYM. NO.	DESCRIPTION	CU's
1	1	78-10170	Base 8" bolt circle	
2	* *	32-23450	Conduit 2" PVC Schedule 40	
3	* *	32-58100	Elbow conduit PVC 90° 36" R	
4	* *	32-05800	Adapter male PVC 2"	
5	* *	40-86750	Plastic red marker tape	

NOTES:

A. ***Call Before You Dig*** (1-800-922-4455).

B. Trench width depends on type of trenching equipment used.

C. A minimum of 12" separation, vertical or horizontal, shall be maintained between communication or CATV and electrical conduit(s).

D. A minimum separation of 4 feet shall be maintained between electrical conduits and gas service lines. Joint trenching is not permitted for gas lines.

E. A minimum separation of 12" shall be maintained between electrical conduits and water service lines. Separation between electrical conduits and main water lines shall be 18".

F. The trench bottom shall be undisturbed or well tamped earth, (i.e. not loose backfill), such that the trench bottom will not settle and disturb conduits. The trench bottom shall be free from all sharp objects and stones.

G. Private area lighting concrete bases shall be placed on undisturbed earth or machine tamped earth and vertically plumbed. Backfilled shall be tamped to maintain a vertical plumb.

H. All backfill shall be free of stones, debris or any sharp object that may damage the conduit.

I. A 2" diameter conduit (minimum Schedule 40 PVC) is required from the service pedestal and between street light bases. Install galvanized steel or concrete encased PVC under roadways or paved parking areas.

J. A nylon draw cord, (1/8", 400 lb. minimum test) facilitating future cable installation, shall be installed inside the conduit. The draw cord shall extend continuously through the entire length of all conduit sections. Foam or duct seal shall be used to prevent soil from clogging the conduit.

K. Machine digging shall stop not less than 36" from vaults, foundations, equipment, cables, and poles. Trenching shall be completed by hand digging.

L. All *UI* buried cables and/or conduits shall be identified by a red, plastic film, marker tape, *UI* code 40-86750. The marker tape shall run directly above the entire length of each cable and/or conduit section and shall have a minimum vertical separation of 12".

DECORATIVE LIGHTING WIRING DETAILS
N.T.S

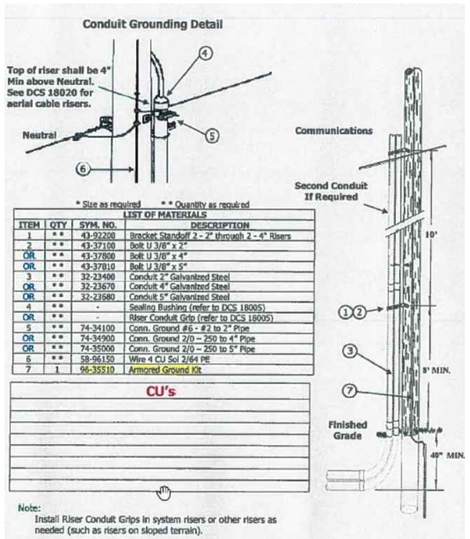

* Size as required * * Quantity as required

LIST OF MATERIALS			
ITEM	QTY	SYM. NO.	DESCRIPTION
1	* *	43-92200	Bracket Standoff 2 - 2" through 2 - 4" Risers
2	* *	43-37100	Bolt U 3/8" x 2"
OR	* *	43-37800	Bolt U 3/8" x 4"
OR	* *	43-37810	Bolt U 3/8" x 5"
3	* *	32-23400	Conduit 2" Galvanized Steel
OR	* *	32-23670	Conduit 4" Galvanized Steel
OR	* *	32-23680	Conduit 5" Galvanized Steel
4	* *	-	Sealing Bushing (refer to DCS 18005)
OR	* *	-	Riser Conduit Grip (refer to DCS 18005)
5	* *	74-34100	Conn. Ground #6 - #2 to 2" Pipe
OR	* *	74-34900	Conn. Ground 2/0 – 250 to 4" Pipe
OR	* *	74-35000	Conn. Ground 2/0 – 250 to 5" Pipe
6	* *	58-96150	Wire 4 CU Sol 2/64 PE
7	1	96-35510	Armored Ground Kit

CU's

Note:
Install Riser Conduit Grips in system risers or other risers as needed (such as risers on sloped terrain).

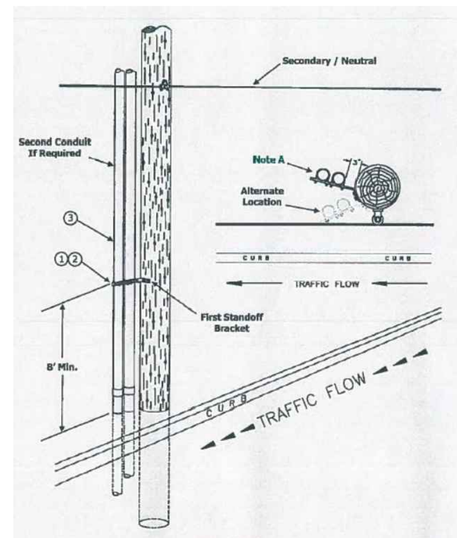

NOTES:

A. The preferred location for UI risers is the field quarter of the pole away from traffic.
B. Riser conduits shall be supported at least every 10 feet.
C. Steel conduit must be grounded. Inter-connect the conduit and earth ground with the system neutral.
D. The following combinations of primary and secondary risers are allowed on a single pole:
   I. Using standoff brackets:
      a. One three phase primary.
      b. Two single phase primary.
      c. One primary riser (1-Ph or 3-Ph) and one secondary riser.
      d. Any combination of single or three phase seconderies up to two conduits.
   II. Combinations not allowed:
      a. One three phase primary and one single phase primary.
E. When other utilities attach risers to the pole it may be desirable to limit the number of UI risers to minimize pole congestion. UI or communications may be required to rise on another pole to keep the number of riser conduits to an acceptable level.
F. Separate riser conduits shall be installed for each riser. Secondary risers are limited to 3 conductors for single phase and 4 conductors for three phase.
G. Riser conduits must not interfere with secondary conductors.
H. The top of the conduit shall extend at least 4 inches above the secondary or neutral height. See DCS 18020 for aerial cable risers.
I. Appropriate conduit fittings shall be used for coupling conduit, changing conduit diameters and transitions from steel to PVC.
J. All metal riser conduits shall be effectively grounded.

DECORATIVE LIGHTING CABLE RISER DETAILS
N.T.S

REV.	DATE	DESCRIPTION	SHEET. NO.
		REVISIONS	

20 0 20
SCALE IN FEET

DESIGNER: JRE
DRAFTER: JRE
CHECKED BY: BAA
APPROVED BY: SON

vhb
Engineers Scientists Planners Designers

ISSUED FOR CONSTRUCTION DATE: APRIL, 2021

PROJECT TITLE: EAST MAIN STREET ROADWAY IMPROVEMENT PROJECT

CADD FILENAME: MDS-4230700.DWG

TOWN: ANSONIA, CONNECTICUT

DRAWING TITLE: MISCELLANEOUS DETAILS

PROJECT NO.: 42307.00
DRAWING NO.: MDS-1
SHEET NO.: 03 OF 28

Apr 06, 2021

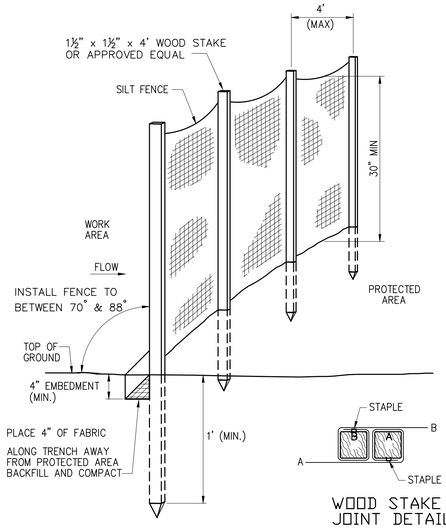

WOOD STAKE
JOINT DETAIL

DETAIL NOTES:

1. THE CONTRACTOR SHALL MAINTAIN OR REPLACE THE SEDIMENTATION CONTROL SYSTEM THROUGHOUT THE CONSTRUCTION DURATION AND UNTIL ALL DISTURBED AREAS HAVE BEEN STABILIZED.
2. THE CONTRACTOR SHALL INSPECT THE SYSTEM ONCE A WEEK AND WITHIN 12 HOURS OF THE END OF A STORM WITH A RAINFALL AMOUNT OF 0.5 INCHES OR GREATER.
3. THE CONTRACTOR SHALL CLEANOUT ACCUMULATED SEDIMENT WHEN ONE HALF OF THE ORIGINAL HEIGHT OF THE SYSTEM IS FILLED WITH SEDIMENT, OR AS ORDERED BY THE ENGINEER.
4. FOLLOWING CONSTRUCTION, THE CONTRACTOR SHALL CLEAN ALL DRAINAGE FACILITIES OF ANY ACCUMULATED SEDIMENT AND TRANSPORT SEDIMENT OFF SITE.
5. ALL COSTS ASSOCIATED WITH INSTALLING, MAINTAINING AND THE REMOVAL OF SILT FENCE SHALL BE INCLUDED IN THE CONTRACT UNIT COST PER LINEAR FOOT FOR "SEDIMENTATION CONTROL SYSTEM."

SEDIMENTATION CONTROL SYSTEM
N.T.S.

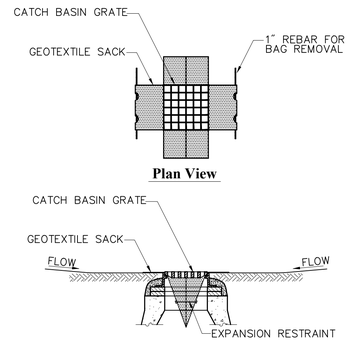

DETAIL NOTES:

1. INSTALL GEOTEXTILE SACK IN ALL CATCH BASINS WHERE INDICATED ON THE PLAN OR AS DIRECTED BY THE ENGINEER BEFORE COMMENCING WORK.
2. GRATE TO BE PLACED OVER GEOTEXTILE SACK.
3. GEOTEXTILE SACK SHALL BE INSPECTED PERIODICALLY AND AFTER ALL STORM EVENTS AND CLEANING OR REPLACEMENT SHALL BE PERFORMED PROMPTLY AS NEEDED. MAINTAIN UNTIL UPSTREAM AREAS HAVE BEEN PERMANENTLY STABILIZED.
4. ALL COSTS ASSOCIATED WITH THE INSTALLATION, MAINTENANCE, AND REMOVAL OF THE GEOTEXTILE SACK, INCLUDING THE DISPOSAL OF COLLECTED MATERIALS, SHALL BE INCLUDED IN THE CONTRACT UNIT COST PER EACH "SEDIMENT CONTROL SYSTEM AT CATCH BASIN."

SEDIMENTATION CONTROL SYSTEM AT CATCH BASIN DETAIL
N.T.S.

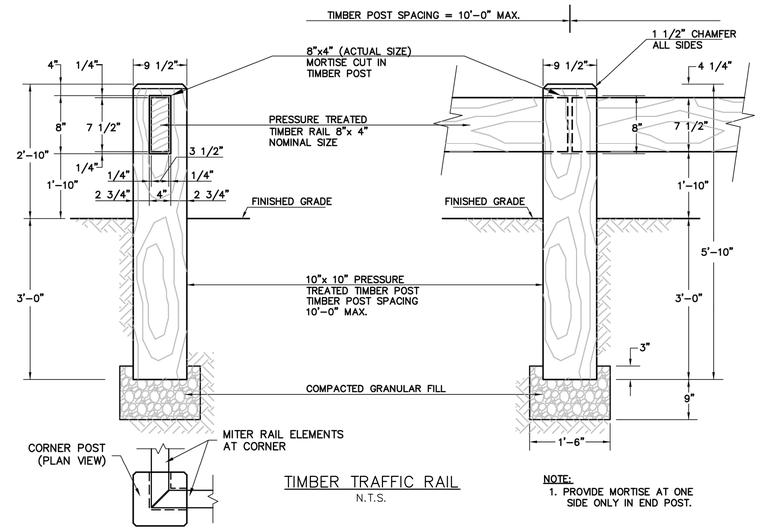

TIMBER TRAFFIC RAIL
N.T.S.

NOTE:
1. PROVIDE MORTISE AT ONE SIDE ONLY IN END POST.

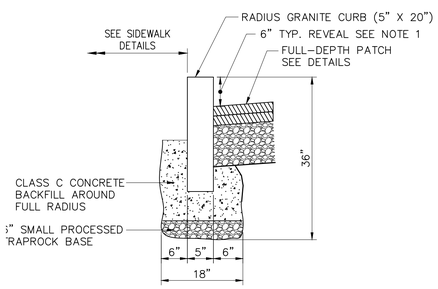

NOTE:

1. THE CURB REVEAL SHALL BE 6" FROM THE FINAL PAVEMENT SURFACE UNLESS OTHERWISE NOTED, OR AS DIRECTED BY THE ENGINEER.

RADIUS GRANITE CURB SECTION
N.T.S

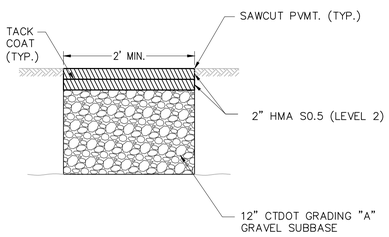

FULL-DEPTH PATCH REPAIR DETAIL
N.T.S.

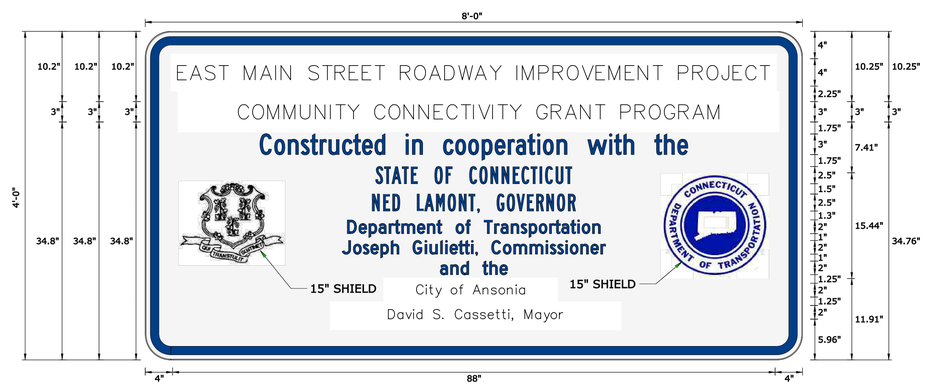

PROJECT SIGN
N.T.S.

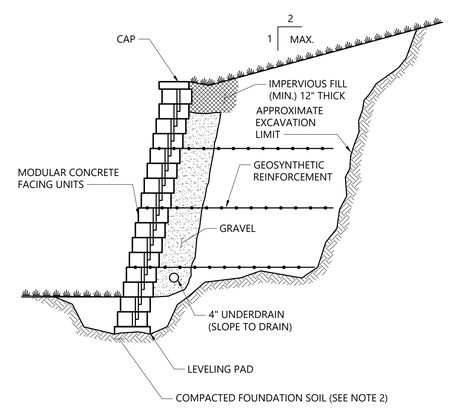

NOTES

1. DETAIL PROVIDED FOR GENERAL INFORMATION ONLY. THE CONTRACTOR IS RESPONSIBLE FOR THE STAMPED FINAL DESIGN OF MODULAR WALL SYSTEM.
2. FOUNDATION SOILS MUST BE SUITABLE AND HAVE SUFFICIENT CAPACITY TO SUPPORT WALL SYSTEM. ANY UNSUITABLE MATERIAL MUST BE REMOVED AND REPLACED WITH SUITABLE BACKFILL AND COMPACTED.

RETAINING WALL
N.T.S.

REV.	DATE	DESCRIPTION	SHEET. NO.
		REVISIONS	

20 0 20
SCALE IN FEET

DESIGNER: JRE
DRAFTER: JRE
CHECKED BY: BAA
APPROVED BY: SON

vhb
Engineers Scientists Planners Designers

ISSUED FOR CONSTRUCTION DATE: APRIL, 2021

PROJECT TITLE: EAST MAIN STREET ROADWAY IMPROVEMENT PROJECT

CADD FILENAME: MDS-4230700.DWG

TOWN: ANSONIA, CONNECTICUT

DRAWING TITLE: MISCELLANEOUS DETAILS

PROJECT NO.: 42307.00
DRAWING NO.: MDS-2
SHEET NO.: 04 OF 28

Apr 06, 2021

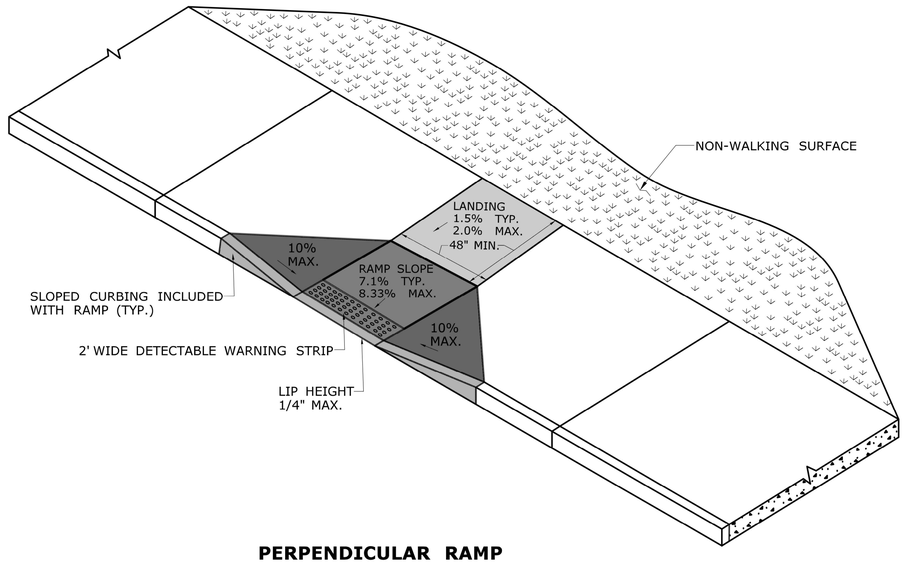

PERPENDICULAR RAMP
WITH 48" BY-PASS
(TYPE 8)

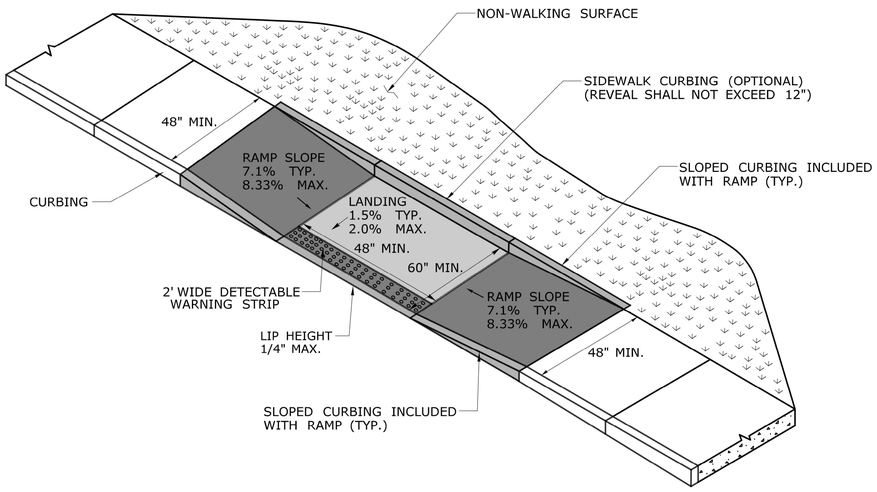

PARALLEL RAMP WITHOUT
NON-WALKING SURFACE
(TYPE 9)

REV.	DATE	DESCRIPTION	SHEET. NO.
		REVISIONS	

20 0 20
SCALE IN FEET

DESIGNER: JRE
DRAFTER: JRE
CHECKED BY: BAA
APPROVED BY: SON

vhb
Engineers Scientists Planners Designers

ISSUED FOR CONSTRUCTION DATE: APRIL, 2021

PROJECT TITLE: EAST MAIN STREET ROADWAY IMPROVEMENT PROJECT

CADD FILENAME: MDS-4230700.DWG

TOWN: ANSONIA, CONNECTICUT

DRAWING TITLE: MISCELLANEOUS DETAILS

PROJECT NO.: 42307.00
DRAWING NO.: MDS-3
SHEET NO.: 05 OF 28

Apr 06, 2021

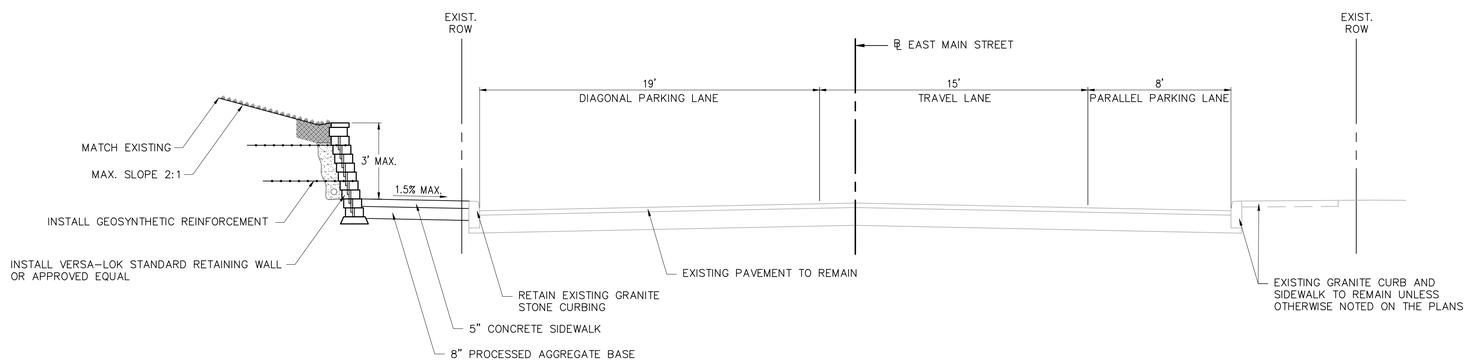

EAST MAIN STREET

STA. 105+77.40 TO STA. 110+86.00

NOT TO SCALE

REV.	DATE	DESCRIPTION	SHEET. NO.
		REVISIONS	

20 0 20
SCALE IN FEET

DESIGNER: JRE
DRAFTER: JRE
CHECKED BY: BAA
APPROVED BY: SON

vhb
Engineers Scientists Planners Designers

ISSUED FOR CONSTRUCTION DATE: APRIL, 2021

PROJECT TITLE:
EAST MAIN STREET
ROADWAY IMPROVEMENT PROJECT

CADD FILENAME: TYP-4230700.DWG

TOWN:
ANSONIA, CONNECTICUT

DRAWING TITLE:
TYPICAL SECTIONS
EAST MAIN STREET

PROJECT NO.: 42307.00
DRAWING NO.: TYP-1
SHEET NO.: 06 OF 28

Apr 06, 2021

\\vhb.com\gbi\proj\Wethersfield\42307.00\cad\te\planset\EXT-4230700.dwg

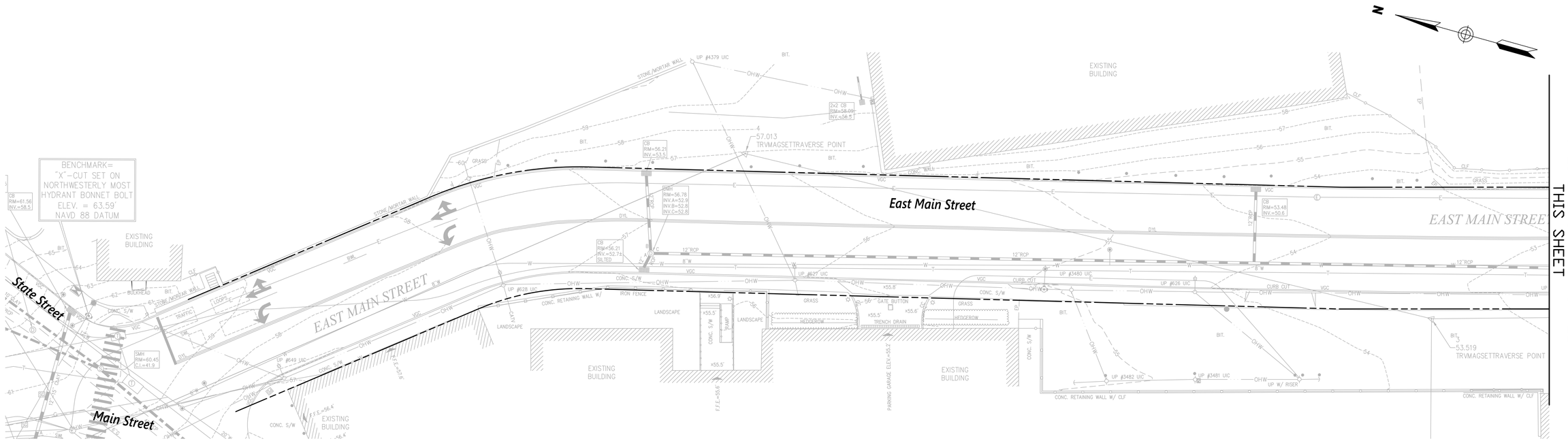

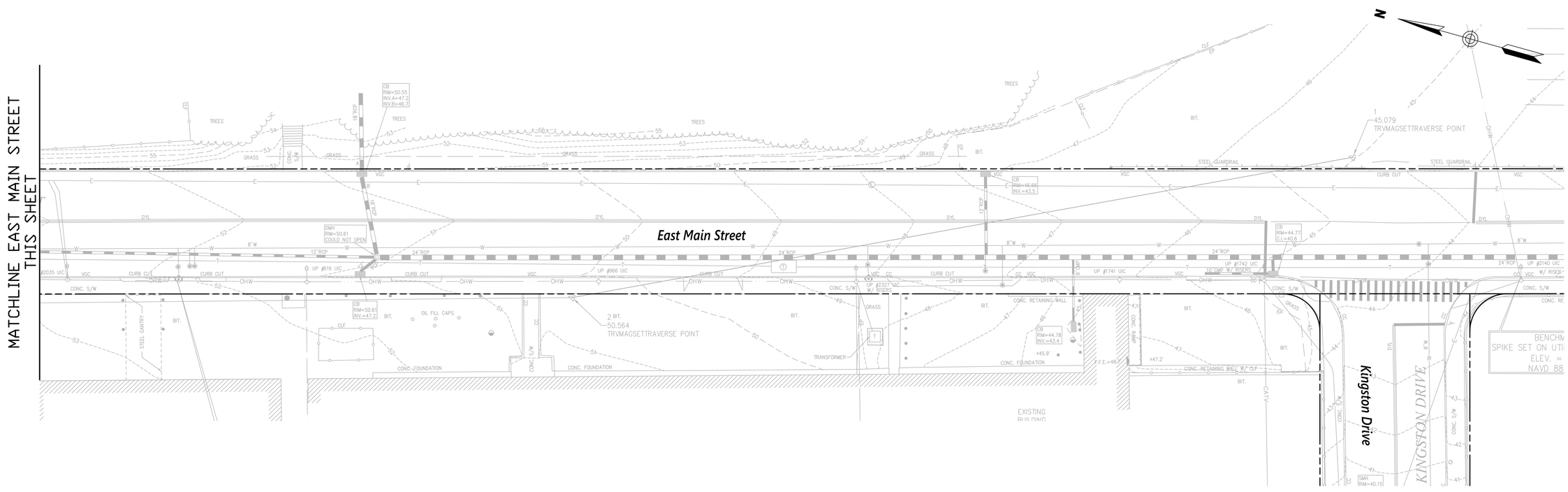

REV.	DATE	DESCRIPTION	SHEET. NO.
		REVISIONS	

20 0 20
SCALE IN FEET

DESIGNER: JRE
DRAFTER: JRE
CHECKED BY: BAA
APPROVED BY: SON

vhb
Engineers Scientists Planners Designers

ISSUED FOR CONSTRUCTION DATE: APRIL, 2021

PROJECT TITLE:
EAST MAIN STREET
ROADWAY IMPROVEMENT PROJECT

CADD FILENAME: EXT-4230700.DWG

TOWN: ANSONIA, CONNECTICUT

DRAWING TITLE:
EXISTING CONDITIONS PLAN
EAST MAIN STREET

PROJECT NO.: 42307.00
DRAWING NO.: EXT-1
SHEET NO.: 07 OF 28

Apr 06, 2021

\\vhb.com\gbi\proj\Wethersfield\42307.00\cad\te\planset\PLN-4230700.dwg

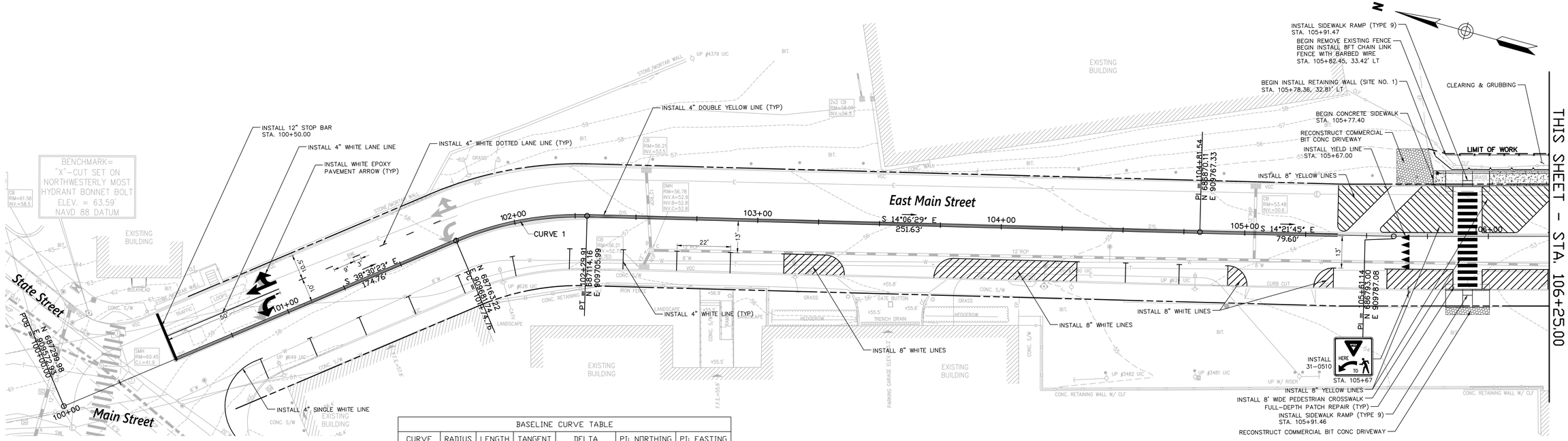

BASELINE CURVE TABLE						
CURVE	RADIUS	LENGTH	TANGENT	DELTA	PI: NORTHING	PI: EASTING
CURVE 1	129.50	55.15'	28.00	024° 23' 54"	687141.31	909699.17

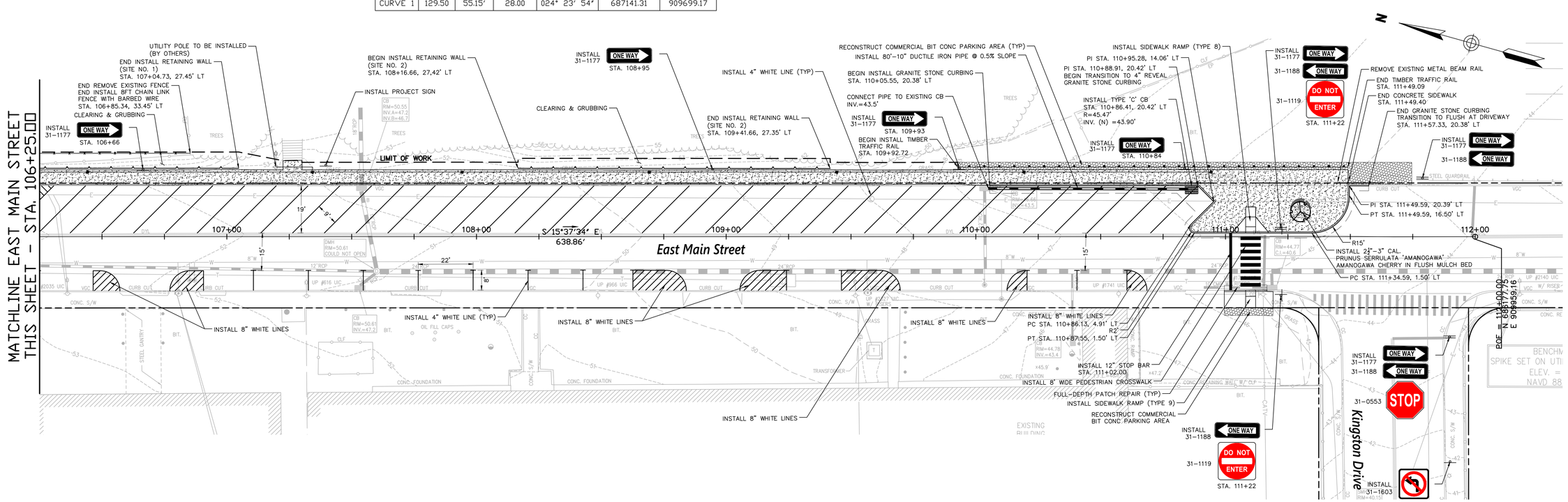

REV.	DATE	DESCRIPTION	SHEET. NO.
		REVISIONS	

20 0 20
SCALE IN FEET

DESIGNER: JRE
DRAFTER: JRE
CHECKED BY: BAA
APPROVED BY: SON

vhb
Engineers Scientists Planners Designers

ISSUED FOR CONSTRUCTION DATE: APRIL, 2021

PROJECT TITLE:
EAST MAIN STREET
ROADWAY IMPROVEMENT PROJECT

CADD FILENAME: PLN-4230700.DWG

TOWN: ANSONIA, CONNECTICUT

DRAWING TITLE:
CONSTRUCTION PLAN
EAST MAIN STREET

PROJECT NO.: 42307.00
DRAWING NO.: PLN-1
SHEET NO.: 08 OF 28

Apr 06, 2021

\\vhb.com\gbi\proj\Wethersfield\42307.00\cad\te\planset\LTG-4230700.dwg

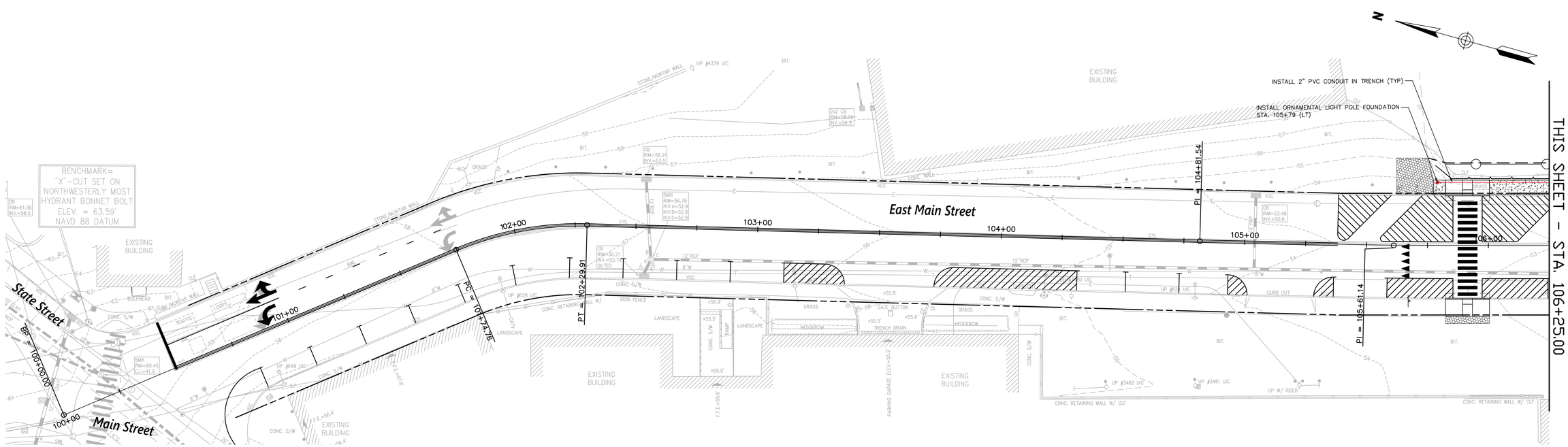

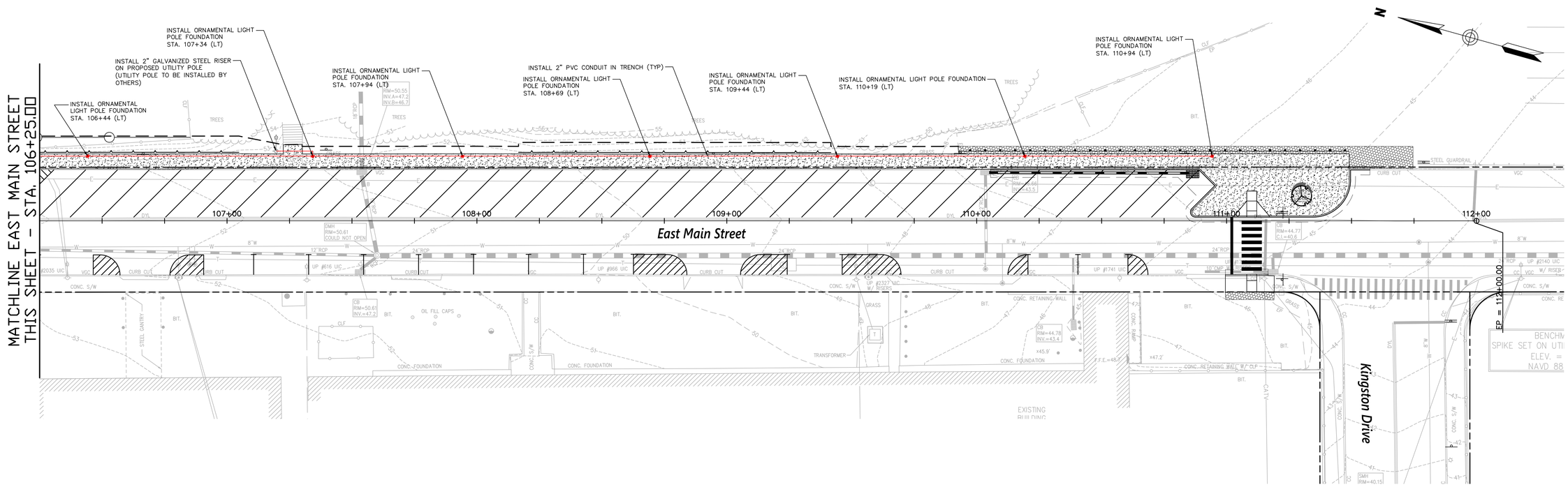

REV.	DATE	DESCRIPTION	SHEET. NO.
		REVISIONS	

20 0 20
SCALE IN FEET

DESIGNER: JRE
DRAFTER: JRE
CHECKED BY: BAA
APPROVED BY: SON

vhb
Engineers Scientists Planners Designers

ISSUED FOR CONSTRUCTION DATE: APRIL, 2021

SIGILLUM ANSONIA IN REPUB. CONNECTICUT CONDIT. 1844 ANSON G. PHELPS 1893

PROJECT TITLE:
EAST MAIN STREET
ROADWAY IMPROVEMENT PROJECT

CADD FILENAME: LTG-4230700.DWG

TOWN:
ANSONIA, CONNECTICUT

DRAWING TITLE:
LIGHTING PLAN
EAST MAIN STREET

PROJECT NO.: 42307.00
DRAWING NO.: LTG-1
SHEET NO.: 09 OF 28

Apr 06, 2021

*ONLY STANDARD SHEETS MARKED WITH AN "✓" ARE IN THIS PROJECT #

**REVISED OR ADDED

✓*	SHEET NO.	TITLE	APPROVAL DATE**
✓	HW-286_01	DRAINAGE TRENCH EXCAVATION	7-15-20
	HW-506_01	ENDWALLS, SLOPE PAVED INLETS AND OUTLETS	1-26-12
	HW-506_02	TYPE "D-G" & "L" ENDWALLS	7-13-12
	HW-506_03	ENDWALLS FOR PIPE - ARCH	9-18-09
✓	HW-586_01	CATCH BASIN AND DROP INLET TYPES "C" AND "C-L"	7-15-20
	HW-586_02	CATCH BASIN TOPS (TYPES "C" AND "C-L") FOR DOUBLE GRATE TYPE I	7-15-20
	HW-586_03	CATCH BASIN TOPS (TYPES "C" AND "C-L") FOR DOUBLE GRATE TYPE II	7-15-20
	HW-586_04	PRECAST CATCH BASIN AND ROUND STRUCTURE	7-15-20
	HW-586_05	PRECAST CATCH BASIN TYPES FOR DOUBLE GRATE TYPE I	7-15-20
	HW-586_06	PRECAST CATCH BASIN TYPES FOR DOUBLE GRATE TYPE II	7-15-20
✓	HW-586_07	CATCH BASIN TOPS TYPE "C" AND "C-L"	7-15-20
✓	HW-586_08	CATCH BASIN FRAMES AND GRATES	7-15-20
	HW-586_09	CATCH BASIN LOCK DOWN TOPS	7-15-20
	HW-586_10a	MANHOLE FRAME AND COVER	7-15-20
	HW-586_10b	MANHOLE FRAME AND GRATE	7-15-20
	HW-586_10c	REINFORCED PRECAST CONCRETE MANHOLE	7-15-20
	HW-586_10d	MANHOLE NON-PRECAST CONCRETE UNIT	7-15-20
	HW-686_01	C.C.M. PIPE INSTALLATION	7-15-20
	HW-686_02	PIPE ENDS	7-15-20
	HW-751_01	UNDERDRAINS AND UNDERDRAIN OUTLETS	7-12-12
	HW-803_01a	PAVED APRONS	6-07-17
	HW-803_01b	PAVED DITCHES AND PAVED CHANNELS	6-07-17
	HW-811_01	CONCRETE CURBING	6-07-17
	HW-813_01	GRANITE STONE TRANSITION CURBING	7-24-13
✓	HW-813_02	STONE CURBING	6-07-17
	HW-815_01	BITUMINOUS CONCRETE CURBING	6-07-17
	HW-821_01a	TRANSITION - 45" (1145) F-SHAPE TO 45" (1145) VERTICAL SHAPE SHEET 1	1-26-12
	HW-821_01b	TRANSITION - 45" (1145) F-SHAPE TO 45" (1145) VERTICAL SHAPE SHEET 2	10-18-10
	HW-821_01c	TRANSITION - 45" (1145) F-SHAPE TO 45" (1145) VERTICAL SHAPE SHEET 3	1-26-12
	HW-821_02a	45" F-SHAPE PRECAST CONCRETE BARRIER CURB SHEET 1	1-27-20
	HW-821_02b	45" F-SHAPE PRECAST CONCRETE BARRIER CURB SHEET 2	1-27-20
	HW-821_03a	TRANSITION - 32" (813) JERSEY SHAPE TO 45" (1145) VERTICAL SHAPE SHEET 1	1-26-12

✓*	SHEET NO.	TITLE	APPROVAL DATE**
	HW-821_03b	TRANSITION - 32" (813) JERSEY SHAPE TO 45" (1145) VERTICAL SHAPE SHEET 2	10-18-10
	HW-821_03c	TRANSITION - 32" (813) JERSEY SHAPE TO 45" (1145) VERTICAL SHAPE SHEET 3	10-18-10
	HW-821_03d	TRANSITION - 32" (813) JERSEY SHAPE TO 45" (1145) VERTICAL SHAPE SHEET 4	10-18-10
	HW-821_03e	TRANSITION - 32" (813) JERSEY SHAPE TO 45" (1145) F-SHAPE	7-24-13
	HW-821_04a	MERRITT PARKWAY NARROW MEDIAN BARRIER	6-09-11
	HW-821_04b	MERRITT PARKWAY - 2' (610) WIDE MEDIAN BARRIER AND ROADSIDE BARRIER	7-24-13
	HW-821_05a	TRANSITION - 45" (1145) F-SHAPE TO 54" (1372) VERTICAL SHAPE SHEET 1	1-26-12
	HW-821_05b	TRANSITION - 45" (1145) F-SHAPE TO 54" (1372) VERTICAL SHAPE SHEET 2	1-26-12
	HW-821_06	54" (1372) VERTICAL SHAPE BARRIER	2-06-12
	HW-821_07	MISCELLANOUS DETAILS FOR BARRIER TRANSITIONS	7-12-12
	HW-821_08a	F-SHAPE CONC. BARRIER CURB (21"x45") TRANSITION FOR THRIE-BEAM	1-09-20
	HW-821_08b	F-SHAPE CONC. BARRIER CURB (21"x45") TRANSITION FOR THRIE-BEAM - REINF.	1-09-20
	HW-821_09a	SINGLE SLOPE CONC. BARRIER CURB (20"x42") TRANS. FOR THRIE-BEAM	1-09-20
	HW-821_09b	SINGLE SLOPE CONC. BARRIER CURB (20"x42") TRANS. FOR THRIE-BEAM - REINF.	1-09-20
	HW-821_10a	VERTICAL FACE CONC. (21"x54") TRANSITION FOR THRIE-BEAM	1-09-20
	HW-821_10b	VERTICAL FACE CONC. (21"x54") TRANSITION FOR THRIE-BEAM - REINF.	1-09-20
	HW-821_11a	42" SINGLE SLOPE PRECAST CONCRETE BARRIER CURB -SHEET 1	1-27-20
	HW-821_11b	42" SINGLE SLOPE PRECAST CONCRETE BARRIER CURB -SHEET 2	1-27-20
	HW-822_01	TEMPORARY PRECAST CONCRETE BARRIER CURB	7-24-13
	HW-905_01	STONE WALL FENCE	1-25-19
	HW-906_01	WIRE FENCE	1-25-19
	HW-910_01	W-BEAM METAL BEAM RAIL HARDWARE	6-09-11
	HW-910_02	METAL BEAM RAIL (TYPE R-B 350) GUIDERAIL	6-09-11
	HW-910_03	METAL BEAM RAIL (TYPE MD-B 350) GUIDERAIL	6-09-11
	HW-910_04	METAL BEAM RAIL (TYPE R-B 350) SYSTEMS 5, 5A, & 6	6-09-11
	HW-910_05	METAL BEAM RAIL R-B 350 SPAN TYPE I, II, III SECTIONS	7-24-13
	HW-910_06	R-B 350 BRIDGE ATTACHMENT SAFETY SHAPE PARAPET	6-09-11
	HW-910_07	R-B 350 BRIDGE ATTACHMENT VERTICAL SHAPE PARAPET	1-25-19
	HW-910_08	R-B 350 BRIDGE ATTACHMENT TRAILING END	6-09-11
	HW-910_09a	MISCELLANEOUS GUIDERAIL TRANSITIONS SHEET 1	1-26-12
	HW-910_09b	MISCELLANEOUS GUIDERAIL TRANSITIONS SHEET 2	7-25-12
	HW-910_10	METAL BEAM RAIL 8" (203) X 6" (152) BOX BEAM	7-24-13
	HW-910_11	CURVED GUIDERAIL TREATMENT DETAIL	7-25-12

NOT TO SCALE

####

SIGNATURE BLOCK:

OFFICE OF ENGINEERING
2800 BERLIN TURNPIKE
NEWINGTON, CT 06111

STATE OF CONNECTICUT
DEPARTMENT OF TRANSPORTATION

CTDOT
STANDARD SHEET

STANDARD SHEET TITLE:

HIGHWAY STANDARD SHEET INDEX

STANDARD SHEET NO.:

1 OF 2

PLOTTED DATE: 7/22/2020

*ONLY STANDARD SHEETS MARKED WITH AN "✓" ARE IN THIS PROJECT #

**REVISED OR ADDED

✓*	SHEET NO.	TITLE	APPROVAL DATE**
	HW-910_12a	MERRITT PARKWAY GUIDERAIL LEADING END ATTACHMENTS AND SYSTEMS 2&3	7-24-13
	HW-910_12b	MERRITT PARKWAY GUIDERAIL HARDWARE DETAILS	7-24-13
	HW-910_12c	MERRITT PARKWAY GUIDERAIL TRAILING END ATTACHMENTS	7-24-13
	HW-910_12d	MERRITT PARKWAY MEDIAN GUIDERAIL AND END ANCHOR	6-09-11
	HW-910_13a	THRIE-BEAM METAL BEAM RAIL HARDWARE	7-24-13
	HW-910_13b	THRIE-BEAM TRANSITIONS	7-24-13
	HW-910_14a	THRIE-BEAM 350 BRIDGE ATTACHMENT	6-09-11
	HW-910_14b	THRIE-BEAM 350 GUIDERAIL TRANSITION TO R-B 350 GUIDERAIL	6-09-11
	HW-910_15	MD-B 350 MEDIAN BARRIER SAFETY SHAPE ATTACHMENT TYPE I	6-09-11
	HW-910_16	MD-B 350 MEDIAN BARRIER SAFETY SHAPE ATTACHMENT TYPE II	6-09-11
	HW-910_17	R-B TERMINAL SECTION	7-24-13
	HW-910_18	METAL BEAM RAIL (TYPE MD-I) GUIDERAIL	10-18-10
	HW-910_19a	METAL BEAM RAIL (MODIFIED TYPE R-I) AND END ANCHORAGE TYPE I	7-24-13
	HW-910_19b	METAL BEAM RAIL (MODIFIED TYPE R-I) AND END ANCHORAGE TYPE II	7-24-13
	HW-910_19c	METAL BEAM RAIL (MODIFIED TYPE R-I) SYSTEMS 2 AND 3	7-24-13
	HW-910_20	MASH W-BEAM HARDWARE	1-05-18
	HW-910_21	METAL BEAM RAIL (R-B MASH) GUIDERAIL	1-25-19
	HW-910_22	METAL BEAM RAIL (MD-B MASH) GUIDERAIL	1-05-18
	HW-910_23	METAL BEAM RAIL (R-B MASH) HALF & QUARTER POST SPACING GUIDERAIL	1-05-18
	HW-910_24	METAL BEAM RAIL SPAN SECTION TYPES II AND III	1-05-18
	HW-910_25	METAL BEAM RAIL TRANSITION 350 TO MASH	1-05-18
	HW-910_26	THRIE-BEAM ATTACHMENT HARDWARE	1-09-20
	HW-910_27	THRIE-BEAM ATTACHMENT	1-09-20
	HW-911_01	R-B END ANCHORAGE TYPE I AND II	1-25-19
	HW-911_02	MD-B END ANCHORAGE TYPE I	1-05-18
	HW-911_03	ANCHOR IN EARTH CUT SLOPE & ANCHOR IN ROCK CUT SLOPE	10-18-10
	HW-911_05	MERRITT PARKWAY GUIDERAIL END ANCHORS	7-24-13
✓	HW-913_01a	CHAIN LINK FENCE	5-06-19
✓	HW-913_01b	CHAIN LINK FENCE HARDWARE	5-06-19
	HW-913_02	CHAIN LINK FENCE GATES	5-06-19
	HW-918_01a	THREE CABLE GUIDERAIL (I-BEAM POSTS) SHEET 1	7-24-13
	HW-918_01b	THREE CABLE GUIDERAIL (I-BEAM POSTS) SHEET 2	1-26-12
	HW-918_01c	THREE CABLE GUIDERAIL (I-BEAM POSTS) SHEET 3	7-24-13

✓*	SHEET NO.	TITLE	APPROVAL DATE**
✓	HW-921_01	DRIVEWAY RAMPS AND SIDEWALKS	6-07-17
✓	HW-949_01a	LANDSCAPE PLANTING	6-15-19
	HW-949_01b	TREE STAKING	6-15-19
	HW-1800_01	GRADING PLAN FOR IMPACT ATTENUATION SYSTEMS (FLARED AND TANGENTIAL)	1-25-19
	HW-1800 02	GRADING PLAN FOR IMPACT ATTENUATION SYSTEMS (MEDIAN/GORE)	1-25-20

NOT TO SCALE

####

SIGNATURE BLOCK:

OFFICE OF ENGINEERING
2800 BERLIN TURNPIKE
NEWINGTON, CT 06111

STATE OF CONNECTICUT
DEPARTMENT OF TRANSPORTATION

CTDOT STANDARD SHEET

STANDARD SHEET TITLE:

HIGHWAY STANDARD SHEET INDEX

STANDARD SHEET NO.:

PLOTTED DATE: 7/22/2020

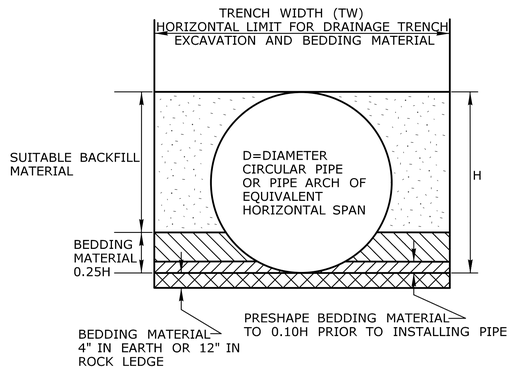

PIPE TRENCH FOR PIPES LESS THAN 48"

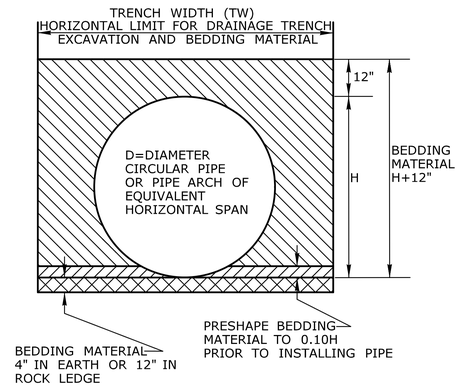

PIPE TRENCH FOR PIPES GREATER THAN OR EQUAL TO 48"

TRENCH WIDTH (TW) CHART

PIPE, PIPE-ARCH, OR DRAINAGE STRUCTURE	TRENCH WIDTH
PIPE OR PIPE-ARCH WITH NOMINAL INSIDE HORIZONTAL SPAN LESS THAN 30"	2' GREATER THAN NOMINAL INSIDE HORIZONTAL SPAN
PIPE OR PIPE-ARCH WITH NOMINAL INSIDE HORIZONTAL SPAN GREATER THAN OR EQUAL TO 30"	3' GREATER THAN NOMINAL INSIDE HORIZONTAL SPAN
PIPE OR PIPE-ARCH FABRICATED FROM STRUCTURAL PLATES	4' GREATER THAN NOMINAL INSIDE HORIZONTAL SPAN
DRAINAGE STRUCTURES	2' BEYOND ALL EXTERIOR OR FOUNDATION WALLS

NOT TO SCALE
####

SIGNATURE BLOCK:
OFFICE OF ENGINEERING
2800 BERLIN TURNPIKE
NEWINGTON, CT 06111

SUBMITTED BY:
Leo Fontaine, P.E.
2020.07.08
09:20:49-04'00'

APPROVED BY:
James Fallon, P.E.
Digitally signed by James Fallon, P.E.
DN: cn=James Fallon, P.E., c=US, o=Department of Transportation, ou=Bureau of Engineering and Construction, ou=State of Connecticut, email=James.Fallon@ct.gov
Date: 2020.07.14 08:07:19-04'00'

STATE OF CONNECTICUT
DEPARTMENT OF TRANSPORTATION

CTDOT STANDARD SHEET

STANDARD SHEET TITLE:
DRAINAGE TRENCH EXCAVATION

STANDARD SHEET NO.:
HW-286_01

PLOTTED DATE: 7/7/2020

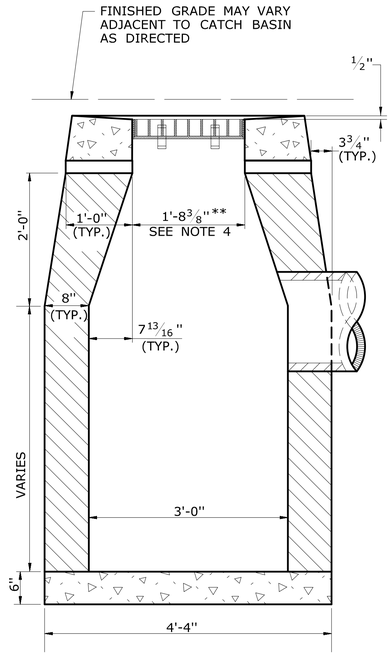

SECTION B

TYPE "C-L" CATCH BASIN

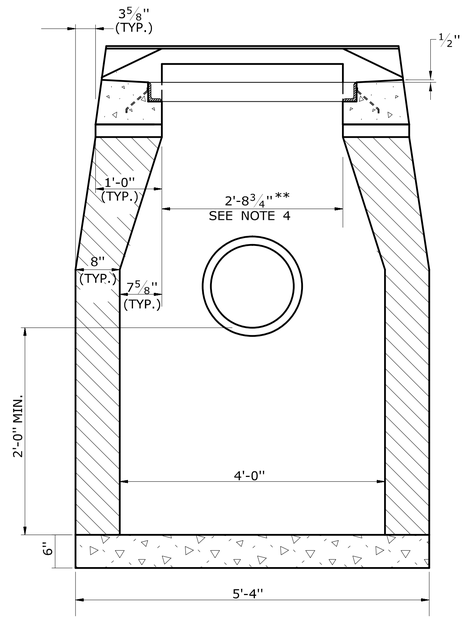

SECTION A

TYPE "C" & "C-L" CATCH BASIN (TYPE "C" TOP SHOWN)

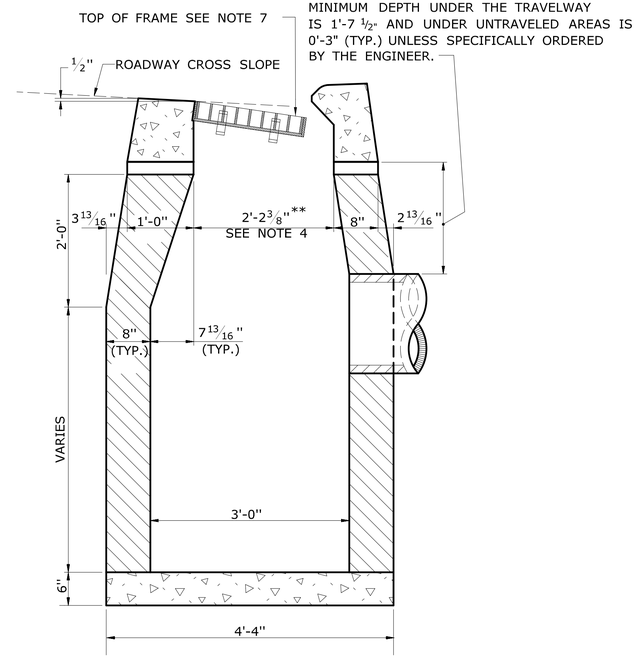

SECTION B

TYPE "C" CATCH BASIN

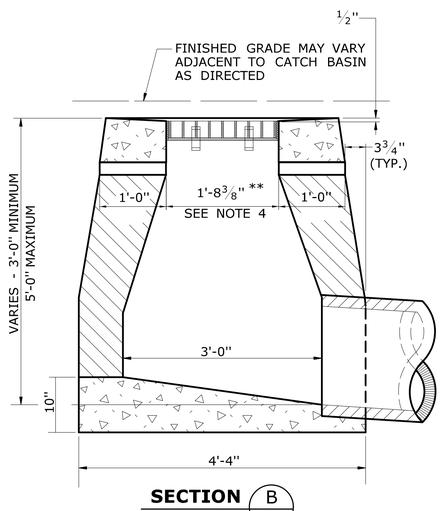

SECTION B

TYPE "C-L" DROP INLET

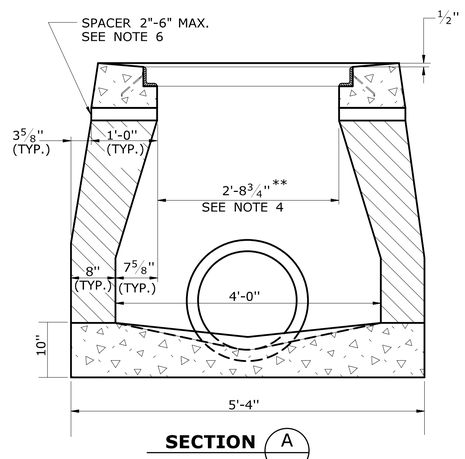

SECTION A

TYPE "C" & "C-L" DROP INLET (TYPE "C-L" TOP SHOWN)

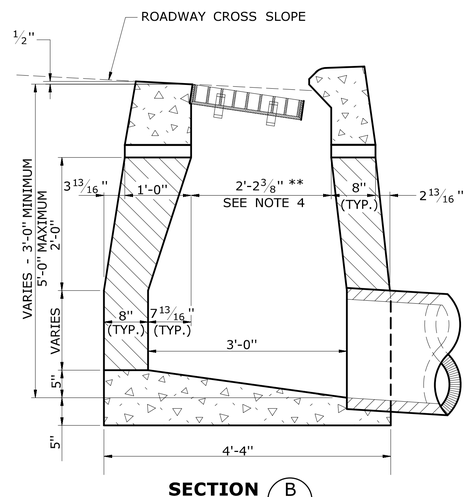

SECTION B

TYPE "C" DROP INLET

GENERAL NOTES:

1. FOR CATCH BASIN TOPS, SEE SHEET NO. HW-586_07.
2. ALL FACES OF STRUCTURES IN CONTACT WITH CONCRETE PAVEMENT SHALL BE COVERED WITH A LAYER OF TAR PAPER OR APPROVED EQUAL.
3. USE 6'-0" ON UPGRADE SIDE (SEE PLAN VIEW) OF CONTINUOUS GRADE AND 1'-0" ON DOWNGRADE SIDE OF CONTINUOUS GRADE OR AS DIRECTED BY THE ENGINEER.
4. IF MASONRY UNITS ARE REQUIRED, THE BASIN SHALL BE CONSTRUCTED IN CONFORMANCE WITH THE DIMENSIONS SHOWN. CORBELLING SHALL BE PERMITTED TO A MAXIMUM OF 3". NO PROJECTION SHALL EXTEND INSIDE THE LIMITS FOR THE CATCH BASIN OPENINGS SHOWN IN THE SECTION VIEWS **.
5. WALL THICKNESS OF ALL CATCH BASINS OVER 10' DEEP SHALL BE INCREASED TO 12" THICK. INSIDE DIMENSION SHALL REMAIN THE SAME. 12" THICKNESS SHALL START AFTER THE FIRST 10'.
6. SPACERS CAN BE EITHER CONCRETE MASONRY UNIT OR PRECAST WITH THE REQUIRED REINFORCING (RECOMMENDED BY THE MANUFACTURER) AS NEEDED TO PROVIDE THE PROPER GRADE SHOWN ON THE PLANS.
7. TOP OF FRAME ELEVATION SHALL BE MEASURED IN THE CENTER OF GRATE AT GUTTER LINE.

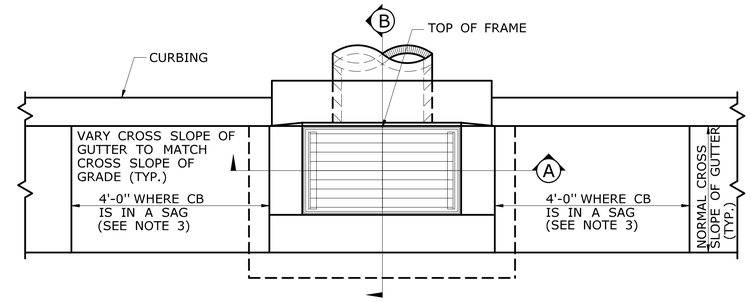

PLAN

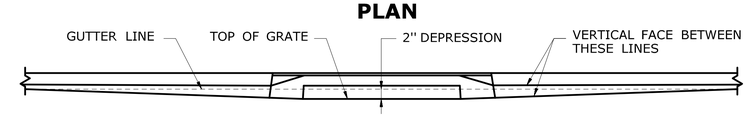

CATCH BASINS IN A LINE WITH 4" CONCRETE PARK CURBING OR 4" BITUMINOUS CONCRETE PARK CURBING

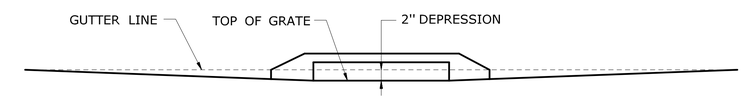

CATCH BASINS WHERE NO CURBING OF ANY TYPE EXISTS OR IS PROPOSED

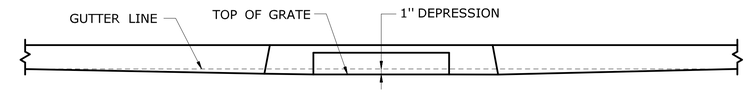

CATCH BASINS IN A LINE WITH 6" CONCRETE CURBING OR 6" STONE CURBING

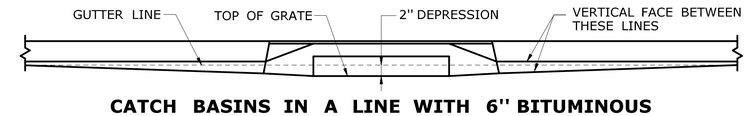

CATCH BASINS IN A LINE WITH 6" BITUMINOUS CONCRETE LIP CURBING (MACHINE FORMED)

DETAILS OF DEPRESSED GUTTER STRIP FOR TYPE "C" CATCH BASIN

	NOT TO SCALE ####	SIGNATURE BLOCK: OFFICE OF ENGINEERING 2800 BERLIN TURNPIKE NEWINGTON, CT 06111	SUBMITTED BY: Lee Fontaine, P.E. 2020.07.08 09:22:22-04'00'	APPROVED BY: James Fallon, P.E.	STATE OF CONNECTICUT DEPARTMENT OF TRANSPORTATION	CTDOT STANDARD SHEET	STANDARD SHEET TITLE: CATCH BASIN AND DROP INLET TYPES "C" AND "C-L"	STANDARD SHEET NO.: HW-586_01

PLOTTED DATE: 7/7/2020

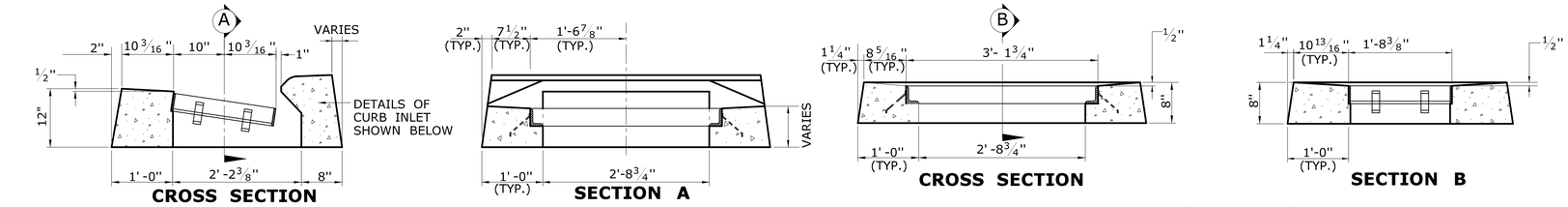

TYPE "C" CATCH BASIN TOP

TYPE "C-L" CATCH BASIN TOP

GENERAL NOTES:

1. FOR DETAILS OF FRAMES AND GRATES, SEE SHEET NO. HW-586_08.
2. ALL BARS SHALL HAVE A MINIMUM 2" COVER.

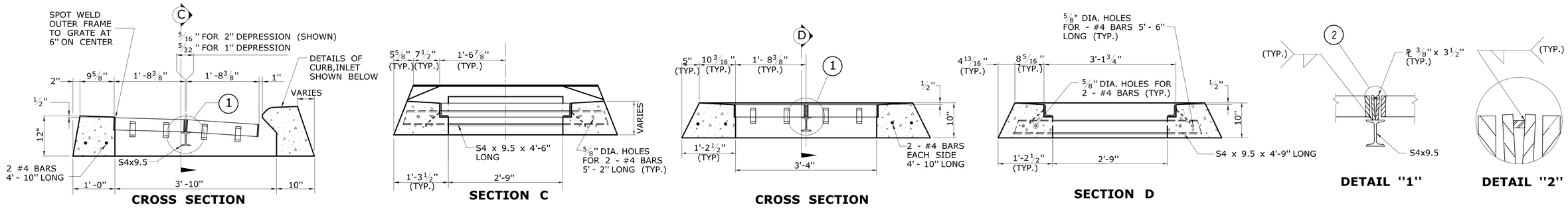

TYPE "C" CATCH BASIN DOUBLE GRATE - TYPE I TOP

TYPE "C-L" CATCH BASIN DOUBLE GRATE - TYPE I TOP

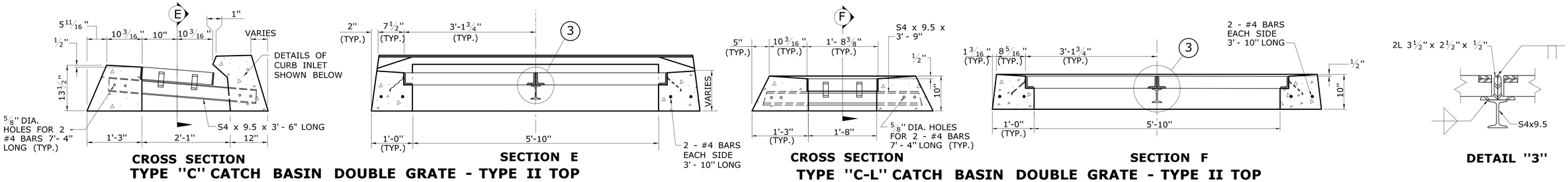

TYPE "C" CATCH BASIN DOUBLE GRATE - TYPE II TOP

TYPE "C-L" CATCH BASIN DOUBLE GRATE - TYPE II TOP

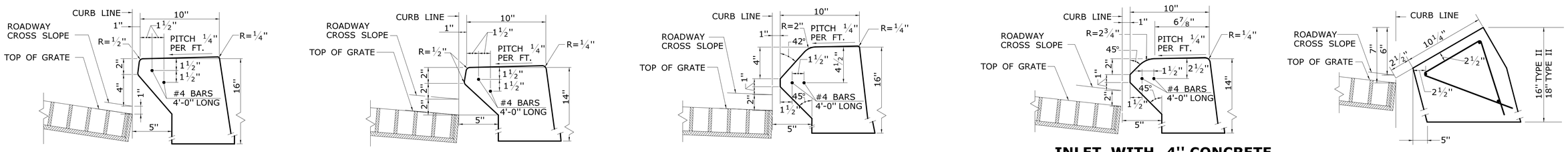

	NOT TO SCALE ####	SIGNATURE BLOCK: OFFICE OF ENGINEERING 2800 BERLIN TURNPIKE NEWINGTON, CT 06111	SUBMITTED BY: Leo Fontaine, P.E. 2020.07.08 09:24:52-04'00'	APPROVED BY: James Fallon, P.E.	STATE OF CONNECTICUT DEPARTMENT OF TRANSPORTATION	CTDOT STANDARD SHEET	STANDARD SHEET TITLE: CATCH BASIN TOPS TYPE "C" AND "C-L"	STANDARD SHEET NO.: HW-586_07

PLOTTED DATE: 6/30/2020

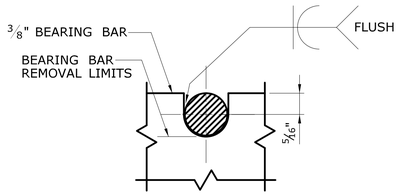

NOTE:
5/8" DIA. ROUND BAR SHALL CONTACT BEARING BAR AT BOTTOM AND BE FLUSH AT TOP.

ROUND BAR ATTACHMENT
CATCH BASIN GRATE TYPE A

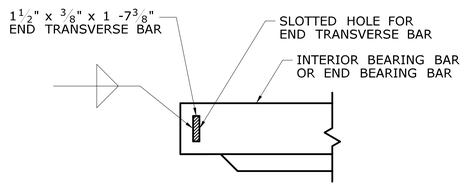

END TRANSVERSE BAR ATTACHMENT
CATCH BASIN GRATE TYPE A AND B

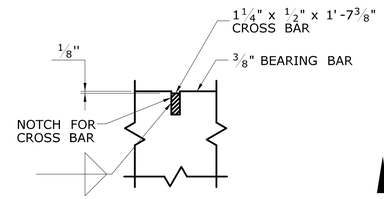

CROSS BAR ATTACHMENT
CATCH BASIN GRATE TYPE B

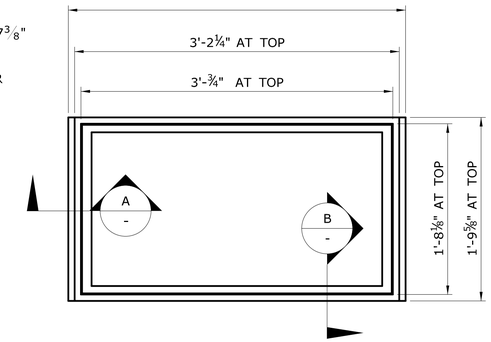

PLAN

GENERAL NOTES:

1. STEEL OR CAST IRON SHALL BE USED FOR FRAMES. STEEL SHALL BE USED FOR TYPE "A" AND "B" GRATES.
2. TYPE "A" GRATES SHALL BE USED ON ALL ROADWAYS WHERE BICYCLE TRAFFIC IS ALLOWED OR ON HEAVY DUTY LOCK DOWN TOPS AS DIRECTED BY THE ENGINEER.
3. TYPE "B" GRATES SHALL BE USED ON ALL LIMITED ACCESS HIGHWAYS, RAMPS AND WHERE BICYCLE TRAFFIC IS NOT ALLOWED OR AS DIRECTED BY THE ENGINEER.
4. DO NOT GALVANIZE CAST IRON FRAMES.
5. DIMENSIONAL TOLERANCES SHALL BE ± 1/16 INCH.
6. ALL STEEL BARS SHALL BE WELDED AT ALL INTERSECTIONS.

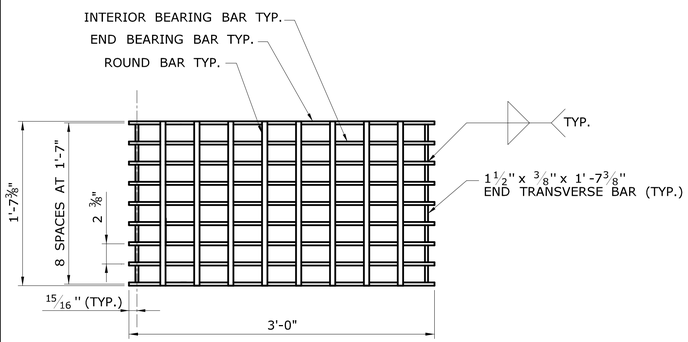

PLAN

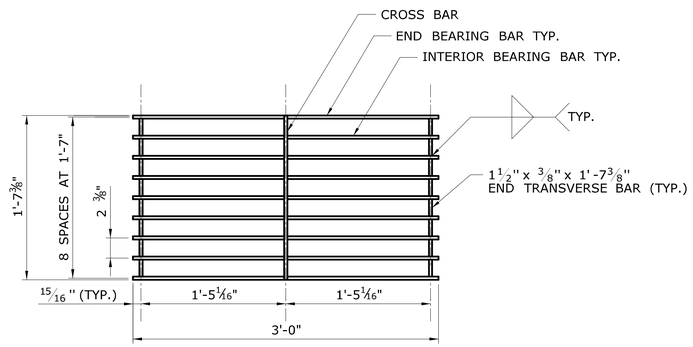

PLAN

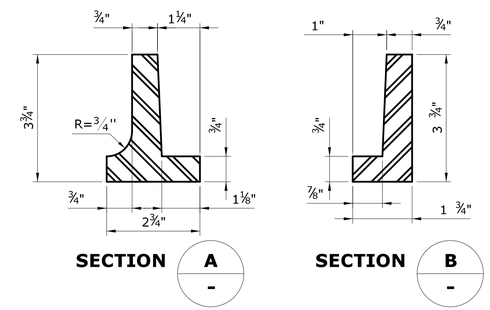

SECTION A **SECTION B**

CAST IRON FRAME ALTERNATE

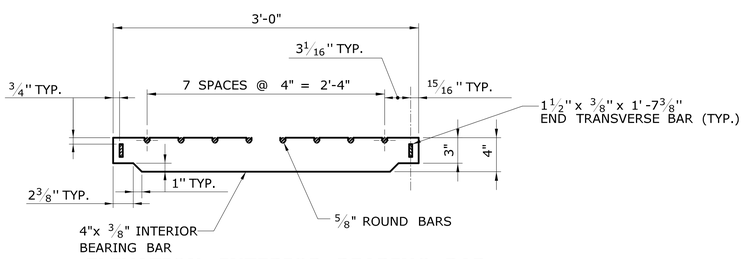

ELEVATION- INTERIOR BEARING BAR

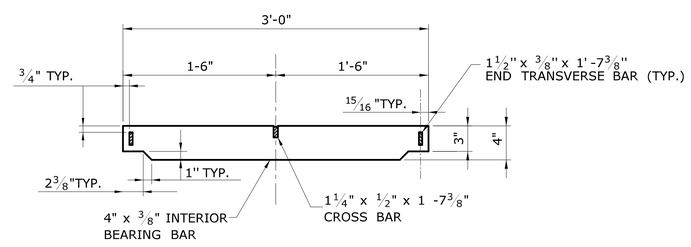

ELEVATION- INTERIOR BEARING BAR

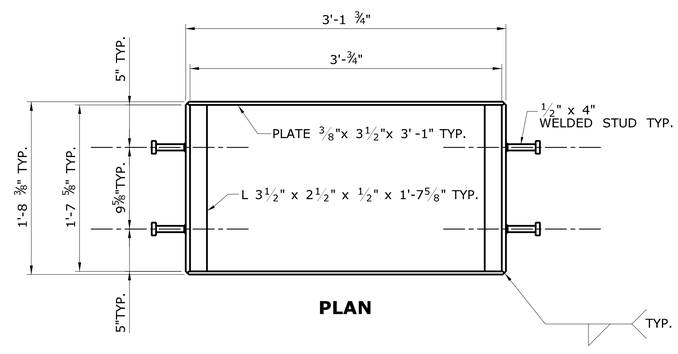

PLAN

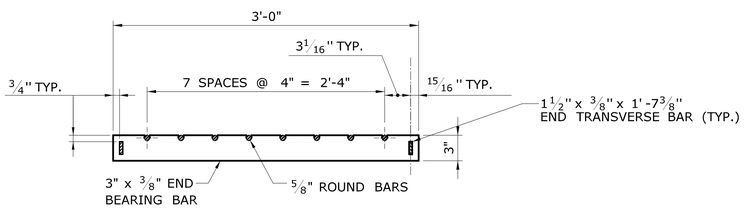

ELEVATION- END BEARING BAR
CATCH BASIN GRATE TYPE A

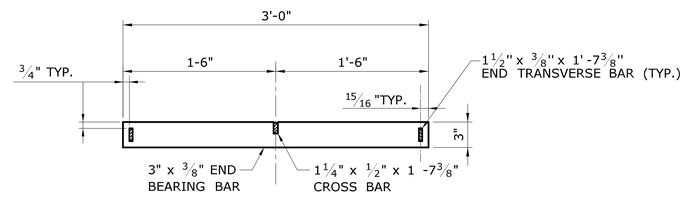

ELEVATION- END BEARING BAR
CATCH BASIN GRATE TYPE B

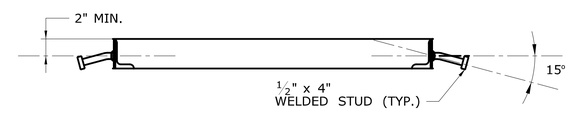

WELDED STUD ANCHOR DETAILS
STEEL FRAME

	NOT TO SCALE ####	SIGNATURE BLOCK: OFFICE OF ENGINEERING 2800 BERLIN TURNPIKE NEWINGTON, CT 06111	SUBMITTED BY: Leo Fontaine, P.E. 2020.07.08 09:25:23-04'00'	APPROVED BY: James Fallon, P.E.	STATE OF CONNECTICUT DEPARTMENT OF TRANSPORTATION	CTDOT STANDARD SHEET	STANDARD SHEET TITLE: CATCH BASIN FRAMES AND GRATES	STANDARD SHEET NO.: HW-586_08

PLOTTED DATE: 6/30/2020

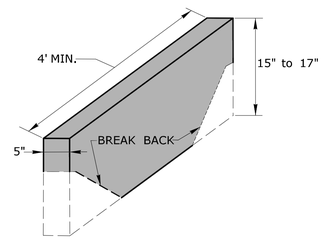

STONE CURBING

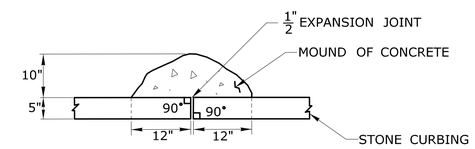

PLAN

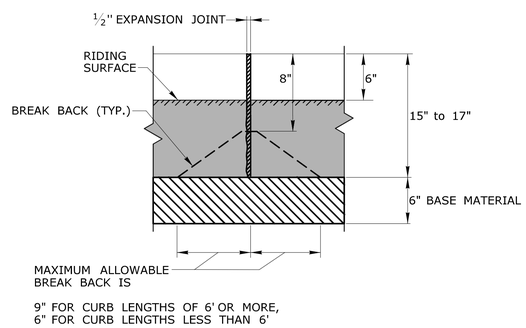

FRONT ELEVATION

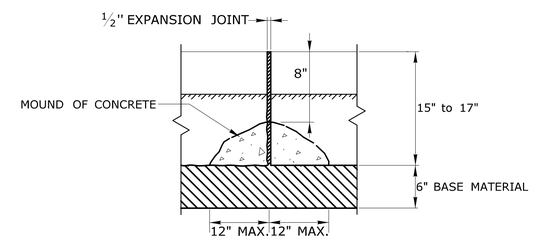

BACK ELEVATION

MOUND OF CONCRETE AT ALL JOINTS FOR STONE CURBING

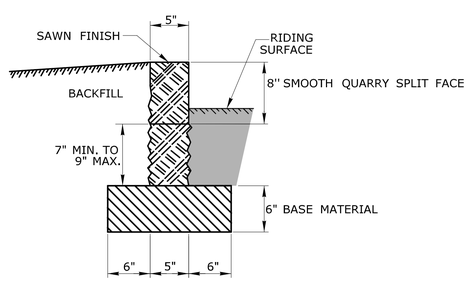

SECTION

	NOT TO SCALE ####	SIGNATURE BLOCK: OFFICE OF ENGINEERING 2800 BERLIN TURNPIKE NEWINGTON, CT 06111	SUBMITTED BY: Leo Fontaine, P.E. 2020.07.08 09:33:33-04'00'	APPROVED BY: James Fallon, P.E. Digitally signed by James Fallon, P.E. DN: c=US, o=Adscripts.com, ou=Certified Notary, ou=Adscripts.com, ou=Terms of Use at www.rapidssl.com/resources/cps (c)10, cn=James Fallon, P.E. Date: 2020.07.14 08:34:33-04'00'	STATE OF CONNECTICUT DEPARTMENT OF TRANSPORTATION	CTDOT STANDARD SHEET	STANDARD SHEET TITLE: STONE CURBING	STANDARD SHEET NO.: HW-813_02

PLOTTED DATE: 7/1/2020

GENERAL NOTES:

1. INSTALL PULL POST ASSEMBLIES AT ALL CHANGES IN VERTICAL TO HORIZONTAL OF 10 DEGREES OR MORE.
2. ALL POSTS WILL BE CAPPED.
3. WHERE ROCK IS ENCOUNTERED, IT SHALL BE DRILLED AND THE POSTS SET IN MORTAR.
4. FENCE SHALL BE PLACED WITH FABRIC FACING OUTSIDE HIGHWAY RIGHT OF WAY OR AS DIRECTED BY THE ENGINEER.
5. SEE HW-913_01b FOR CHAIN LINK FENCE HARDWARE.

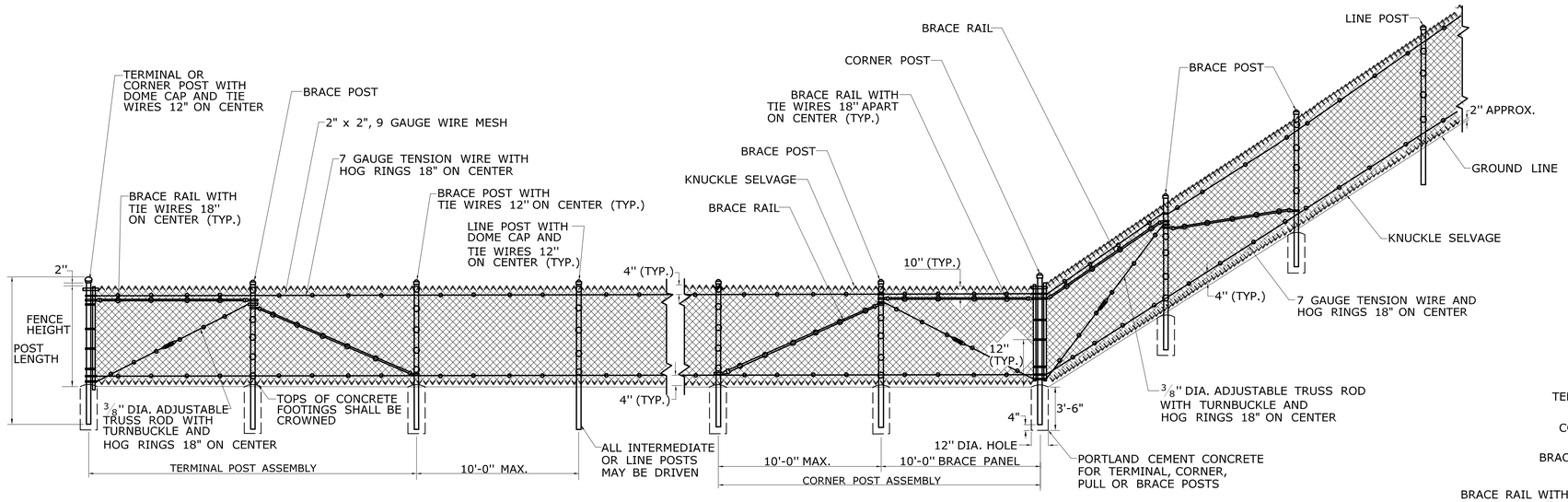

CHAIN LINK FENCE WITH TOP TENSION WIRE

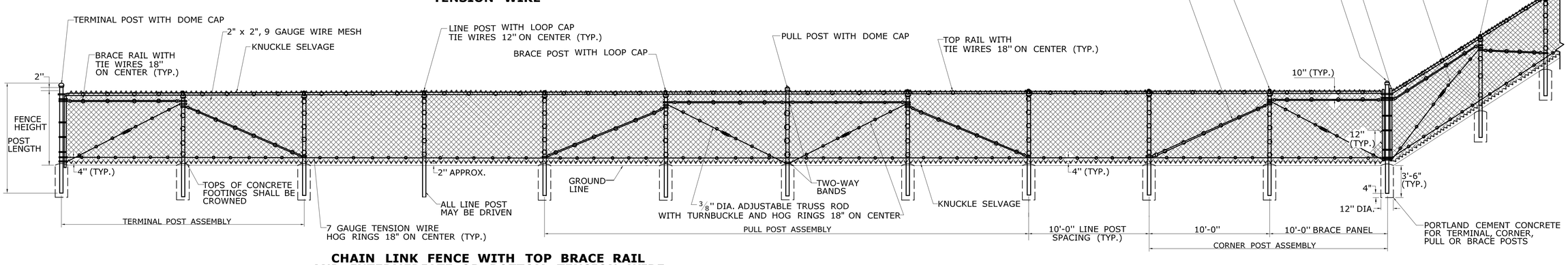

CHAIN LINK FENCE WITH TOP BRACE RAIL AND INTERMEDIATE OR BOTTOM TENSION WIRE

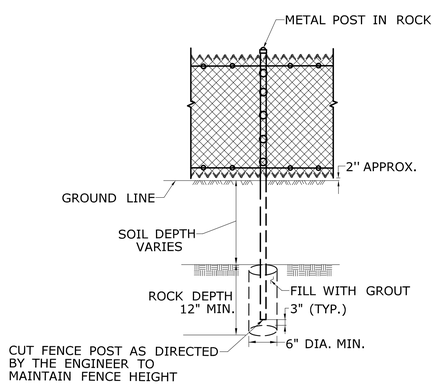

METAL POST IN ROCK

FENCE FABRIC HEIGHT	GROUP 1A ASTM F1083 SCH. 40 PIPE 50,000 PSI DIAMETER	GROUP 1C ASTM F1043 ELEC. RESISTANCE WELDED PIPE 50,000 PSI DIAMETER
LINE OR INTERMEDIATE POST		
UP TO 5'-0"	1 7/8"	1 7/8"
6'-0" TO 7'-0"	2 3/8"	2 3/8"
8'-0" TO 9'-0"	2 7/8"	2 7/8"
10'-0"	3 1/2"	3 1/2"
12'-0" OR HIGHER	4"	4"
TERMINAL, CORNER OR PULL POST		
UP TO 5'-0"	2 3/8"	2 3/8"
6'-0" TO 7'-0"	2 7/8"	2 7/8"
8'-0" TO 9'-0"	3 1/2"	3 1/2"
10'-0" OR HIGHER	4"	4"
TOP OR BRACE RAIL POSTS UP TO 6'-0"	1 5/8"	1 5/8"
POSTS HIGHER THAN 6'-0"	1 7/8"	1 7/8"

NOT TO SCALE
####

SIGNATURE BLOCK:
OFFICE OF ENGINEERING
2800 BERLIN TURNPIKE
NEWINGTON, CT 06111

SUBMITTED BY: Leo Fontaine, P.E. 2020.07.08 10:29:52-04'00'

APPROVED BY: James Fallon, P.E. 2020.07.15 10:20:40-04'00'

STATE OF CONNECTICUT
DEPARTMENT OF TRANSPORTATION

CTDOT STANDARD SHEET

STANDARD SHEET TITLE: CHAIN LINK FENCE

STANDARD SHEET NO.: HW-913_01a

PLOTTED DATE: 7/1/2020

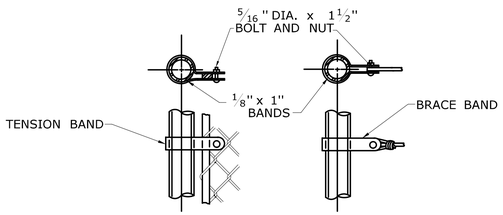

TENSION BAR TENSION WIRE

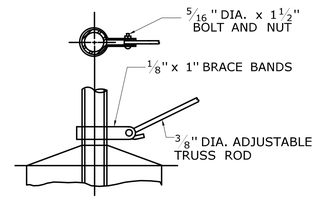

ADJUSTABLE TRUSS ROD

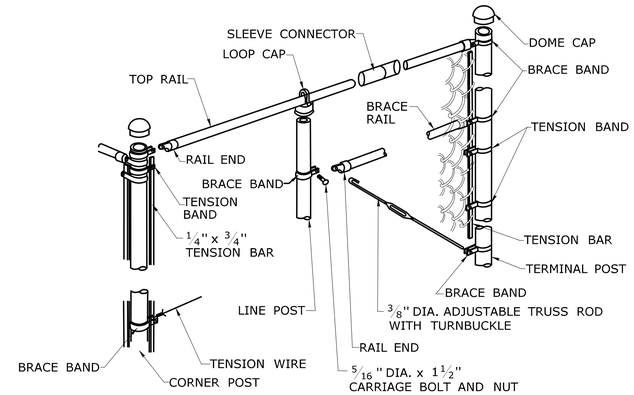

TOP RAIL / TRUSSED BRACE RAIL WITH BOTTOM TENSION WIRE

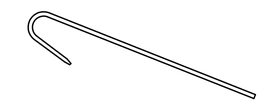

TIE WIRE

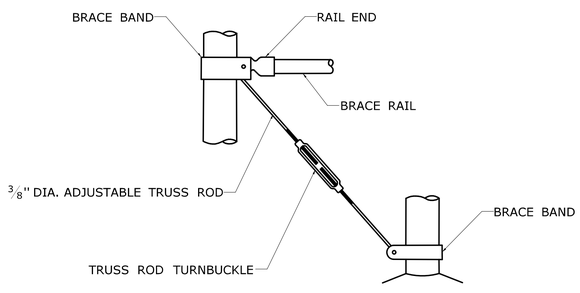

BRACE & TRUSS CONNECTIONS

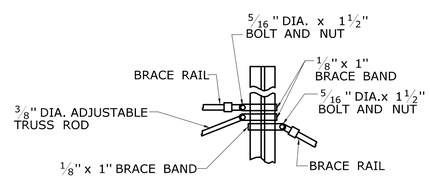

BRACE RAILS ATTACHMENT TO LINE POSTS

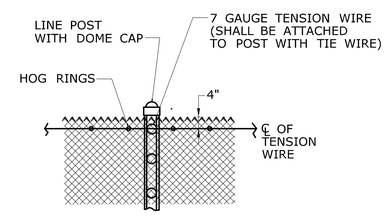

TENSION WIRE

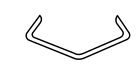

HOG RING

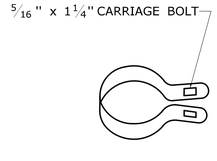

1/8" x 1" BRACE BAND

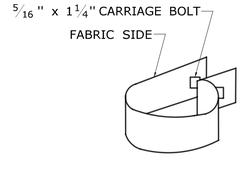

1/8" x 1" TENSION BAND

KNUCKLE SELVAGE

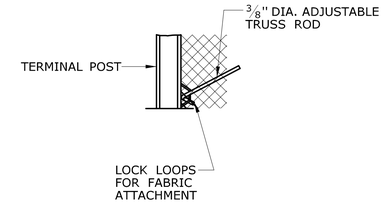

TRUSS ROD ATTACHMENT

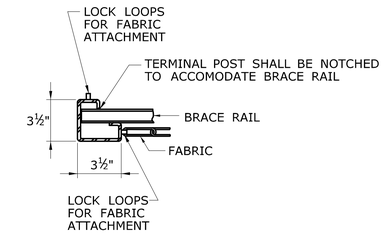

FABRIC AND BRACE RAIL ATTACHMENT

	NOT TO SCALE ####	SIGNATURE BLOCK: OFFICE OF ENGINEERING 2800 BERLIN TURNPIKE NEWINGTON, CT 06111	SUBMITTED BY: Leo Fontaine, P.E. 2020.07.08 10:30:09-04'00'	APPROVED BY: James Fallon, P.E. 2020.07.15 10:20:57-04'00'	STATE OF CONNECTICUT DEPARTMENT OF TRANSPORTATION	CTDOT STANDARD SHEET	STANDARD SHEET TITLE: CHAIN LINK FENCE HARDWARE	STANDARD SHEET NO.: HW-913_01b

PLOTTED DATE: 7/1/2020

GENERAL NOTES:

1. DRIVEWAY ENTRANCE SHALL BE A MINIMUM OF 12' WIDE, EXCLUDING CURBING WHEN PRESENT.
2. WELDED WIRE FABRIC MATS WITH REINFORCING AT CLOSER SPACING MAY BE USED.
3. SURFACE HMA S0.375 TO BE PLACED IN TWO EQUAL LIFTS FOR BOTH RESIDENTIAL AND COMMERCIAL DRIVEWAYS.

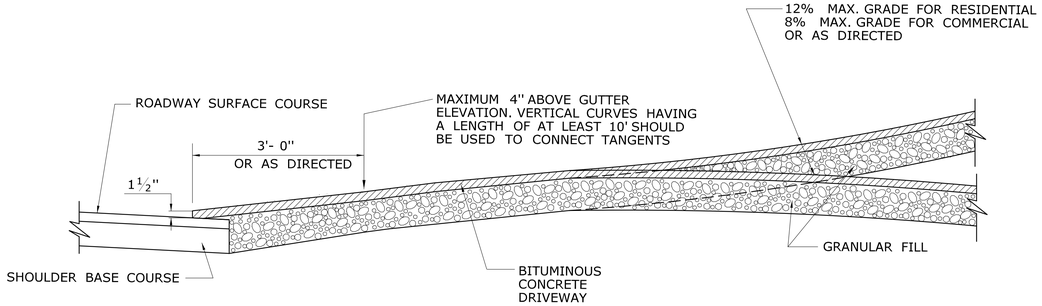

SECTION A

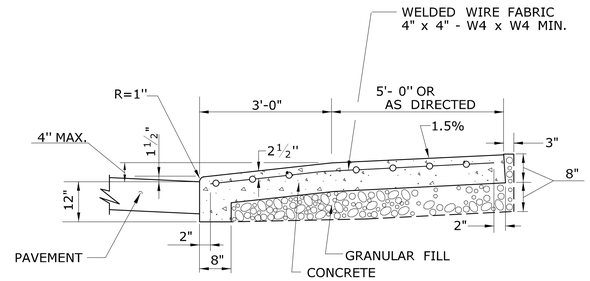

SECTION C

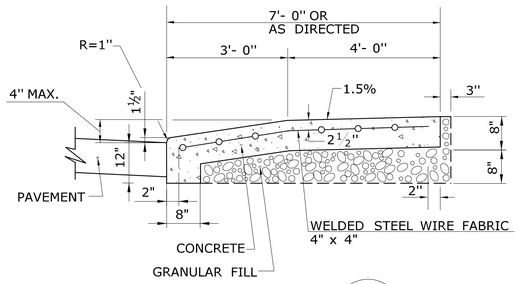

SECTION B

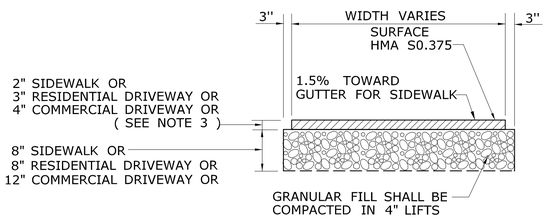

TYPICAL SECTION
BITUMINOUS CONCRETE
SIDEWALK AND DRIVEWAY

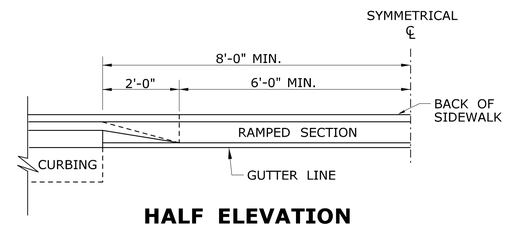

HALF ELEVATION

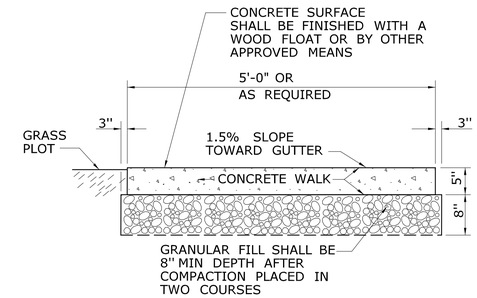

SECTION D

5' WIDE CONCRETE
SIDEWALK WITH GRASS PLOT

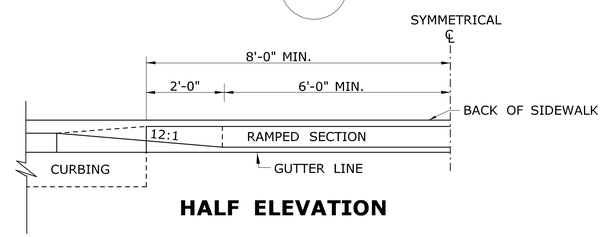

HALF ELEVATION

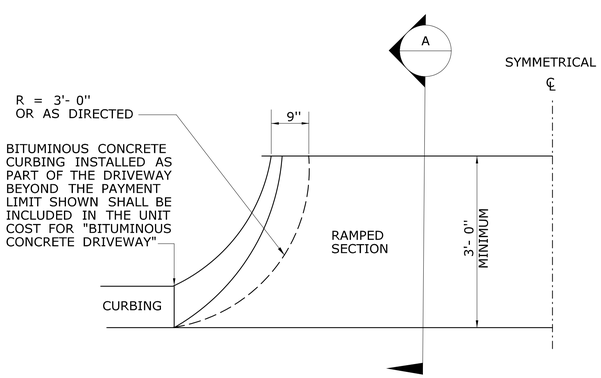

HALF BITUMINOUS CONCRETE
DRIVEWAY PLAN

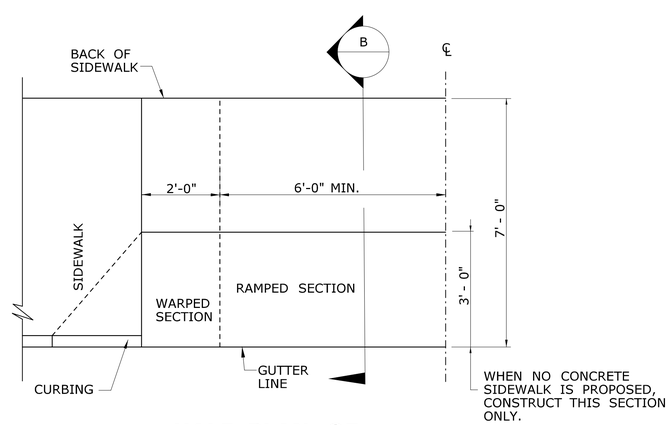

HALF PLAN OF
CONCRETE DRIVEWAY RAMP WHERE
SIDEWALK ADJOINS CURBING

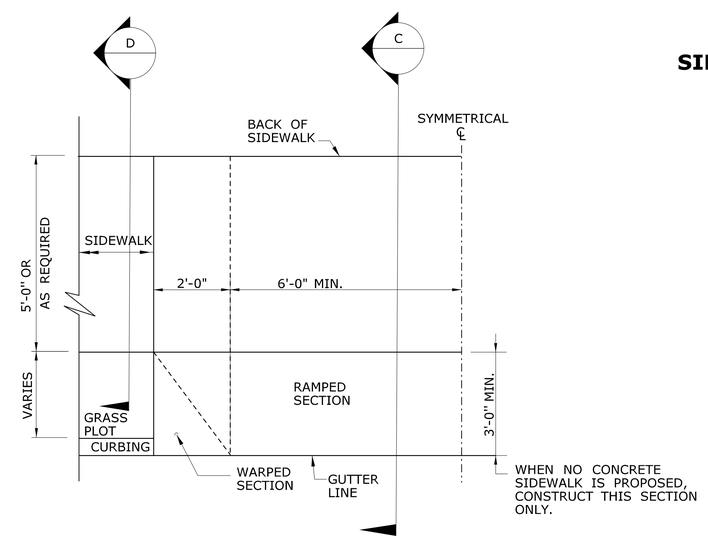

HALF PLAN OF
CONCRETE DRIVEWAY RAMP WHERE
CURB IS SEPARATED FROM
SIDEWALK BY GRASS PLOT

	NOT TO SCALE ####	SIGNATURE BLOCK: OFFICE OF ENGINEERING 2800 BERLIN TURNPIKE NEWINGTON, CT 06111	SUBMITTED BY: Leo Fontaine, P.E. 2020.07.08 10:32:47-04'00'	APPROVED BY: James Fallon, P.E. 2020.07.15 12:16:04-04'00'	STATE OF CONNECTICUT DEPARTMENT OF TRANSPORTATION	CTDOT STANDARD SHEET	STANDARD SHEET TITLE: DRIVEWAY RAMPS AND SIDEWALKS	STANDARD SHEET NO.: HW-921_01

PLOTTED DATE: 7/1/2020

GENERAL NOTES:

1. ALL EXTERIOR PACKAGING MATERIAL APPLIED TO PLANTS SHALL BE REMOVED AFTER THE PLANT IS LOCATED IN THE PIT EXCAVATION. CUT AND REMOVE TWINE, BURLAP OR WIRE BASKETS FROM THE TOP TWO-THIRDS OF THE ROOT BALL.
2. PLANT MALUS SPECIES (DECIDUOUS APPLE TREES OR SHRUBS) DEEP ENOUGH IN PIT TO COVER THE GRAFT TO PREVENT SPROUTING FROM THE ROOT STOCK.

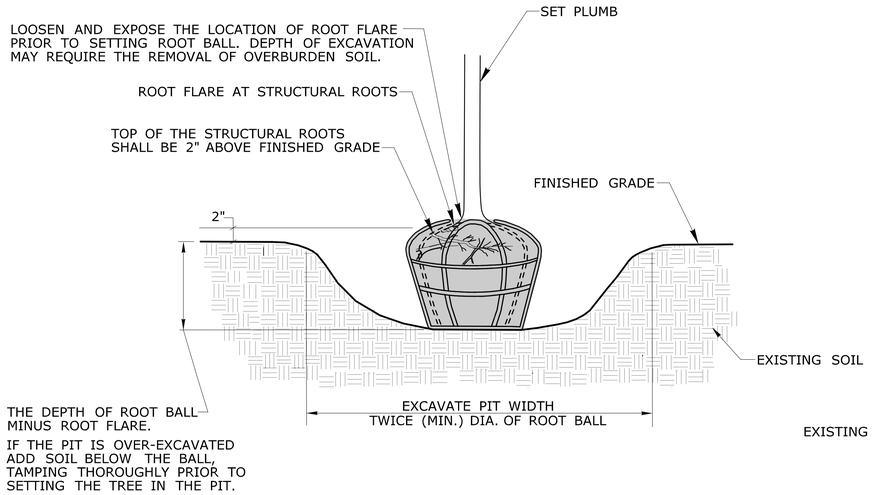

PIT EXCAVATION AND SETTING OF PLANTING

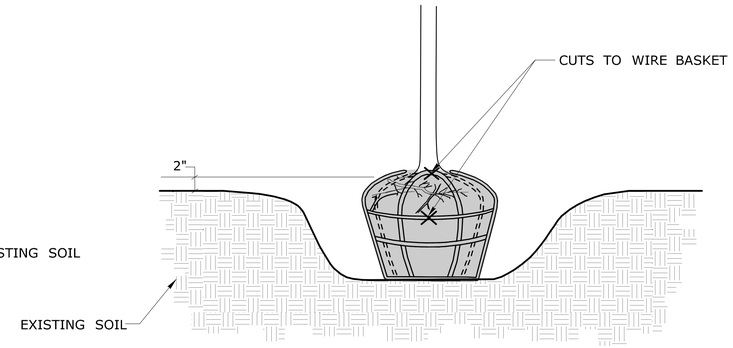

WIRE BASKET REMOVAL

NOTE: IF WIRE BASKETS ARE USED, THE CONTRACTOR SHALL CUT ALL OF THE HORIZONTAL WIRES IN THE TOP $\frac{2}{3}$ OF THE ROOT BALL AND BEND DOWN OR REMOVE THE TOP $\frac{1}{3}$ OF THE WIRE BASKET

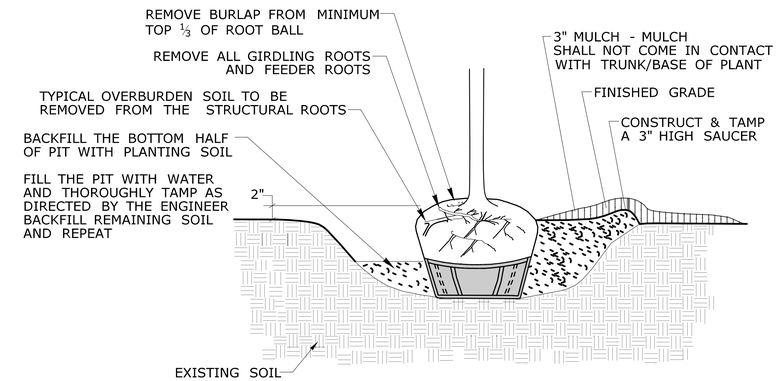

BACKFILL AND MULCH FOR PLANTING

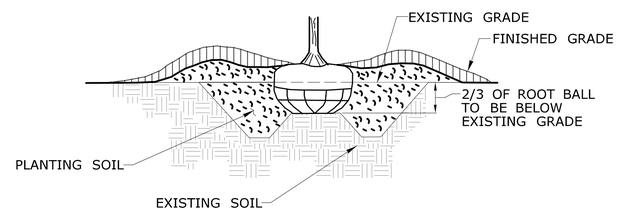

HEAVY CLAY PLANTINGS

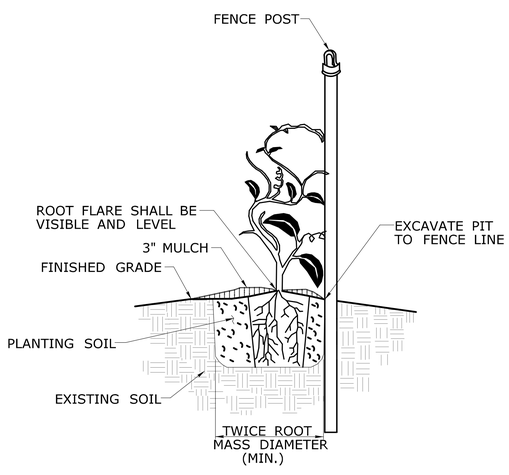

VINE PLANTING

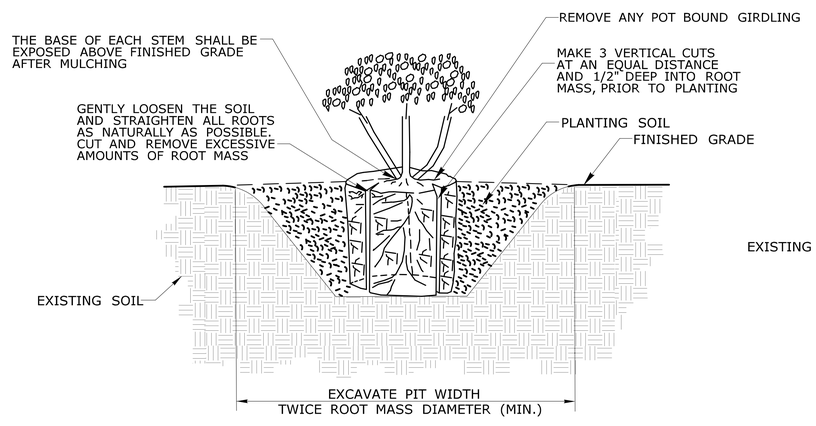

CONTAINER GROWN PLANTING

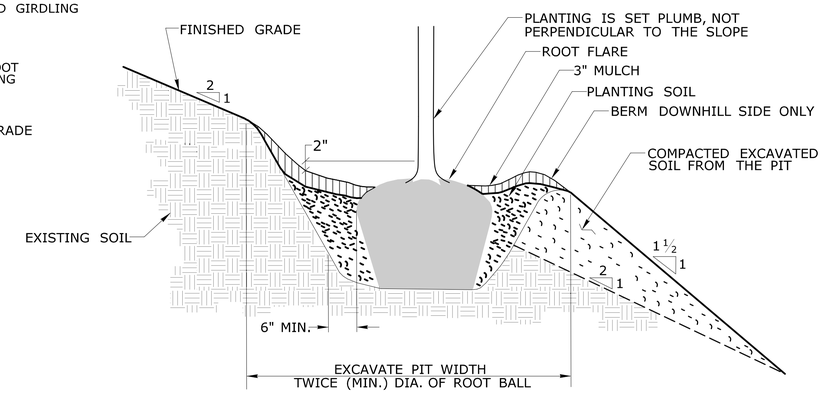

SLOPE PLANTING

	NOT TO SCALE ####	SIGNATURE BLOCK: OFFICE OF ENGINEERING 2800 BERLIN TURNPIKE NEWINGTON, CT 06111	SUBMITTED BY: Leo Fontaine, P.E. 2020.07.08 10:33:07-04'00'	APPROVED BY: James Fallon, P.E. 2020.07.15 12:16:22-04'00'	STATE OF CONNECTICUT DEPARTMENT OF TRANSPORTATION	CTDOT STANDARD SHEET	STANDARD SHEET TITLE: LANDSCAPE PLANTING	STANDARD SHEET NO.: HW-949_01a

PLOTTED DATE: 7/1/2020

ONLY STANDARD SHEETS MARKED WITH AN "✓" ARE IN THIS PROJECT #

	SHEET NO.	TITLE	APPROVAL DATE
☐	TR-1000_01	GENERAL CLAUSES (TEST PROCEDURES)	1/2014
✓	TR-1001_01	TRENCHING & BACKFILLING, ELECTRICAL CONDUIT	4/2012
☐	TR-1002_01	TRAFFIC CONTROL FOUNDATIONS	1/2014
☐	TR-1010_01	CONCRETE HANDHOLE	4/2014
☐	TR-1102_01	PEDESTALS, PEDESTRIAN SIGNALS	4/2012
☐	TR-1105_01	TRAFFIC SIGNALS AND CABLE ASSIGNMENTS	8/2018
☐	TR-1107_01	PEDESTRIAN PUSH BUTTON	8/2018
☐	TR-1108_01	CONTROLLERS	5/2013
☐	TR-1111_01	LOOP VEHICLE DETECTOR AND SAWCUT	4/2014
☐	TR-1113_01	CONTROL CABLE	4/2014
☐	TR-1114_01	BONDING & UTILITY POLE ATTACHMENT DETAILS, SIGN HANGER, "Y" CLAMP DETAILS	8/2018

	SHEET NO.	TITLE	APPROVAL DATE
☐	TR-1205_01	DELINEATION, DELINEATORS AND OBJECT MARKER DETAILS	8/2018
✓	TR-1208_01	SIGN PLACEMENT AND RETROREFLECTIVE STRIP DETAILS	8/2018
✓	TR-1208_02	METAL SIGN POSTS AND SIGN MOUNTING DETAILS	6/2017
☐	TR-1210_01	PAVEMENT MARKINGS (DURABLE MARKINGS) FOR DIVIDED HIGHWAYS	OBSOLETE
☐	TR-1210_02	PAVEMENT MARKINGS (DURABLE MARKINGS) FOR DIVIDED HIGHWAYS	OBSOLETE
☐	TR-1210_03	SPECIAL DETAILS & TYPICAL PAVEMENT MARKINGS FOR TWO-WAY HIGHWAYS	OBSOLETE
✓	TR-1210_04	PAVEMENT MARKING LINES AND SYMBOLS	8/2018
☐	TR-1210_05	PAVEMENT MARKINGS FOR DIVIDED HIGHWAYS	4/2017
☐	TR-1210_06	PAVEMENT MARKINGS FOR DIVIDED HIGHWAYS	8/2018
☐	TR-1210_07	PAVEMENT MARKINGS FOR EXIT RAMPS	4/2017
✓	TR-1210_08	PAVEMENT MARKINGS FOR NON FREEWAYS	8/2018
☐	TR-1210_09	PAVEMENT MARKINGS FOR BICYCLE LANES, PARKING STALLS, AND RR CROSSINGS	4/2017
✓	TR-1220_01	SIGNS FOR CONSTRUCTION AND PERMIT OPERATIONS	8/2018
✓	TR-1220_02	CONSTRUCTION SIGN SUPPORTS AND CHANNELIZING DEVICES	8/2018

STANDARD SHEETS SHALL BE USED WITH STANDARD SPECIFICATIONS

REV.	DATE	REVISION DESCRIPTION
4	4-2017	REMOVED TR-1210_01 TO TR-1210_03. ADDED TR-1210_04 TO TR-1210_09
3	4-2014	REMOVED TR-1111_02.
2	1-2014	REMOVED TR-1103_01.
1	4-2012	RENUMBERED TR-1107_02 TO TR-1114_01. REMOVED TR-1116_01.

THE INFORMATION, INCLUDING ESTIMATED QUANTITIES OF WORK, SHOWN ON THESE SHEETS IS BASED ON LIMITED INVESTIGATIONS BY THE STATE AND IS IN NO WAY WARRANTED TO INDICATE THE CONDITIONS OF ACTUAL QUANTITIES OF WORK WHICH WILL BE REQUIRED.

Plotted Date: 8/16/2018

NOT TO SCALE

STATE OF CONNECTICUT
DEPARTMENT OF TRANSPORTATION

Filename: CTDOT_TRAFFIC_STD_DGN.DGN Model: TR-01-STD_INDEX

SUBMITTED BY: NAME/DATE/TIME:

CTDOT STANDARD SHEET

OFFICE OF ENGINEERING

STANDARD SHEET TITLE:

TRAFFIC STANDARD SHEET INDEX

STANDARD SHEET NO.:

TR-STD_INDEX

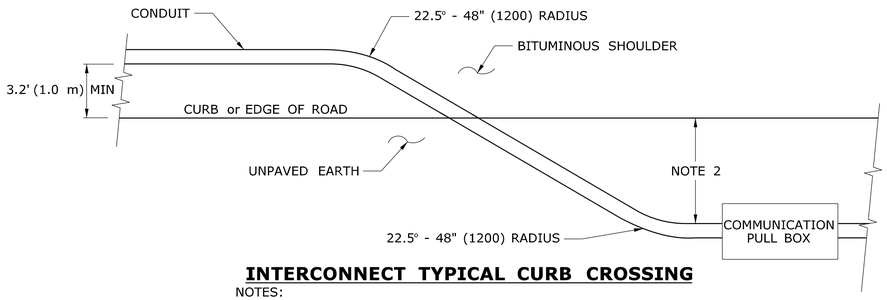

INTERCONNECT TYPICAL CURB CROSSING

NOTES:

1. RESTORE AREAS DISTURBED BY TRENCH TO ORIGINAL CONDITION.
2. INSTALL PULL BOX A MINIMUM OF 10' (3.0 m) FROM CURB UNLESS OTHERWISE SHOWN ON PLANS OR DIRECTED BY ENGINEER.

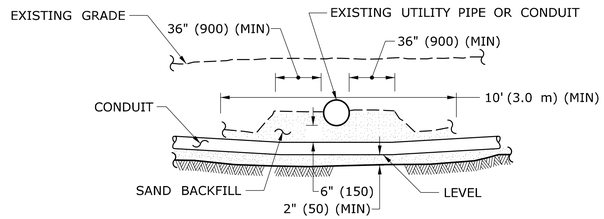

CROSSING UNDER EXISTING UTILITY

NOTES:

1. WHEN ENCOUNTERED AT APPROXIMATELY THE SAME DEPTH, CROSS BENEATH.
2. PROTECT & SUPPORT EXPOSED EXISTING UTILITY.

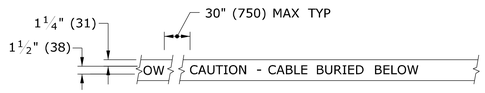

DETECTABLE WARNING TAPE

NOTE:

STANDARD SPECIFICATIONS, ARTICLE: 1.05.15

1. TAPE COLORS:
   COMMUNICATION - ORANGE BACKGROUND / BLACK LEGEND
   POWER - RED BACKGROUND / BLACK LEGEND

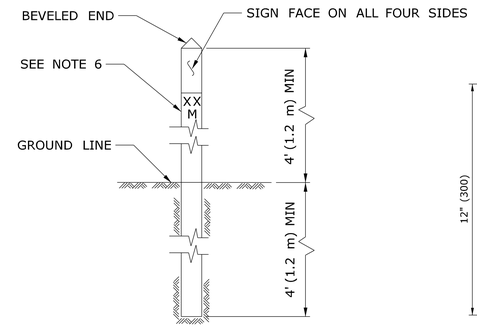

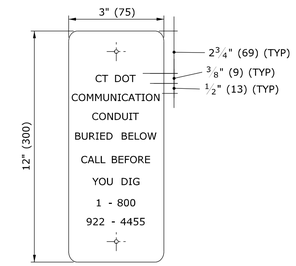

INTERCONNECT CONDUIT IDENTIFICATION POST

SIGN FACE DETAIL
SIGN # 41-4669

NOTES:

1. 4" x 4" (100 x 100) NOMINAL, PRESSURE TREATED WOOD POST.
2. ATTACH SIGN TO POST WITH 1/4" x 1 1/4" (6 x 31) STAINLESS STEEL LAG SCREW WITH NYLON WASHER ON FACE OF SIGN.
3. SIGN COLORS: BACKGROUND - ORANGE (RETROREFLECTIVE) LEGEND - BLACK (OPAQUE).
4. INSTALL POST APPROX 24" (600) FROM RMC IN VICINITY OF EACH PULL BOX.
5. INSTALL POSTS BETWEEN PULL BOXES, APPROX 10' (3.0 m) OFF CURB. SPACE POSTS 1500'± (460 m±) APART.
6. PERMANENTLY ATTACH STAINLESS STEEL NUMBERS INDICATING DISTANCE TO TRENCH IN FEET (METERS) CONTAINING COMMUNICATION CABLE. ATTACH NUMBERS TO SIDE OF POST FACING CONDUIT. INCLUDE "M" SUFFIX IF METERS.

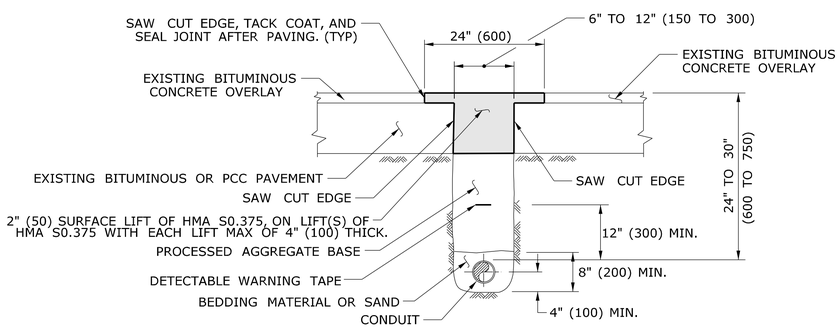

PAVEMENT - BITUMINOUS CONCRETE OR OVERLAYED PORTLAND CEMENT CONCRETE

NOTES:

STANDARD SPECIFICATIONS, ARTICLE: 3.04 & 4.06.03

1. TOTAL HOT MIX ASPHALT (HMA) THICKNESS TO MATCH EXISTING BITUMINOUS CONCRETE AND PORTLAND CEMENT CONCRETE (PCC) THICKNESS.
2. WHEN ALLOWED BY ENGINEER, USE CONTROLLED LOW STRENGTH MATERIAL (CLSM) AS BEDDING MATERIAL. TOP OF CLSM AT LEAST 20" (500) BELOW SURFACE.

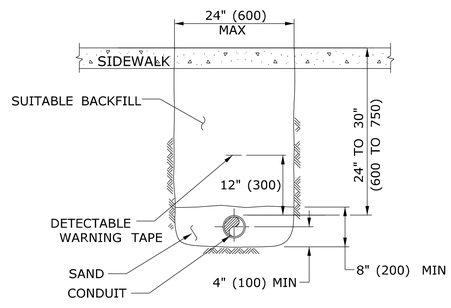

SIDEWALK

NOTES:

STANDARD SPECIFICATIONS, ARTICLE: 9.21 & 9.22

1. WHERE CONCRETE SIDEWALK DAMAGED OR CUT, REPLACE THE ENTIRE SECTION BETWEEN JOINTS. REPLACEMENT SIDEWALK IS PAID FOR AT THE CONTRACT UNIT PRICE FOR "CONCRETE SIDEWALK".

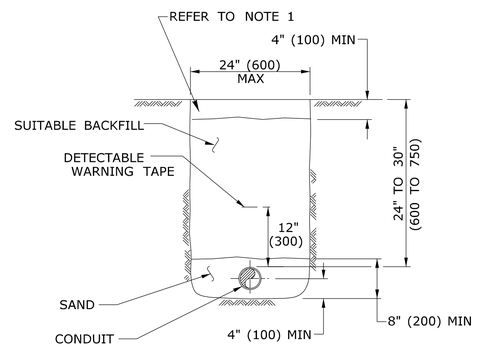

EARTH

NOTES:

STANDARD SPECIFICATIONS, ARTICLE: 9.50

1. IN MOWED AREAS: PLACE TOPSOIL, FERTILIZER, SEED, & MULCH.

GENERAL NOTES:

1. TOP OF CONDUIT NO LESS THAN 24" (600) DEEP.
2. COMPACT BACKFILL IN ≤6" (150) LIFTS. HAND COMPACTION NOT PERMITTED.

LEGEND AS SHOWN ON TRAFFIC CONTROL SIGNAL PLAN:
-- RMC (RIGID METAL CONDUIT)

REV.	DATE	REVISION DESCRIPTION
1	4-2012	REVISED BITUMINOUS CONRCETE TO HMA, & MINOR REVISIONS.

THE INFORMATION, INCLUDING ESTIMATED QUANTITIES OF WORK, SHOWN ON THESE SHEETS IS BASED ON LIMITED INVESTIGATIONS BY THE STATE AND IS IN NO WAY WARRANTED TO INDICATE THE CONDITIONS OF ACTUAL QUANTITIES OF WORK WHICH WILL BE REQUIRED.

Plotted Date: 4/14/2012

DIMENSIONS ARE IN ENGLISH ("/") & METRIC UNITS (mm).
METRIC DIMENSIONS ARE ROUNDED:
- OVER 1" TO NEAREST 5 mm
- UNDER 1" TO NEAREST 1 mm.

NOT TO SCALE

STATE OF CONNECTICUT
DEPARTMENT OF TRANSPORTATION

Filename: CTDOT_TRAFFIC_STD.dgn Model: TR-1001_01

SUBMITTED BY: NAME/DATE/TIME: Tracy L. Fogarty 2012.05.01 12:54:42-04'00'
APPROVED BY: NAME/DATE/TIME: Timothy M. Wilson 2012.05.09 10:23:34-04'00'

CTDOT STANDARD SHEET
OFFICE OF ENGINEERING

STANDARD SHEET TITLE:
TRENCHING & BACKFILLING, ELECTRICAL CONDUIT

STANDARD SHEET NO.: TR-1001_01

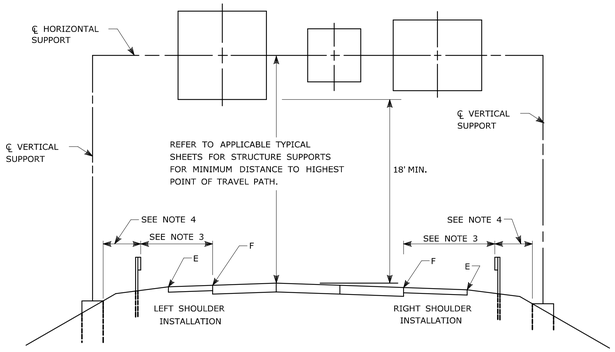

TYPICAL PLACEMENT OF OVERHEAD SIGNS ON SIGN SUPPORTS

NOTES:

1) FOR PLACEMENT OF CANTILEVER SIGN SUPPORT USE APPLICABLE PORTION OF ABOVE DETAIL.
2) BARRIER SYSTEMS MAY BE REQUIRED FOR BOTH SIDES OF SUPPORTS IN MEDIANS.
3) IMPACT PROTECTION SHALL BE PROVIDED FOR THE SIGN SUPPORTS LOCATED WITHIN CLEAR ZONE.
4) SIGN SUPPORT FOUNDATIONS SHALL BE LOCATED OUTSIDE OF BARRIER SYSTEMS DEFLECTION AREA.
5) ALL SIGNS ARE TO BE LEVEL, REGARDLESS OF CAMBER IN SUPPORT.

FOR MAXIMUM EFFECTIVENESS, POSITION SIDE MOUNTED SIGNS ON STRUCTURAL STEEL BREAKAWAY SIGN SUPPORTS AS FOLLOWS:

ON A TANGENT SECTION, POSITION THE SIGN SO THE VERTICAL AXIS IS PLUMB AND THE HORIZONTAL AXIS IS AT AN ANGLE OF 90° WITH THE TRAFFIC LANE WHICH THE SIGN SERVES. SIGNS LOCATED 30 FT OR MORE FROM THE EDGE OF THE ROAD SHALL BE TURNED APPROXIMATELY 3° TOWARD THE ROAD.

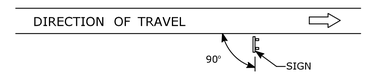

DIAGRAM "A"

ON A HORIZONTAL CURVE SECTION, POSITION THE SIGN SO THE VERTICAL AXIS IS PLUMB AND THE HORIZONTAL AXIS IS AT AN ANGLE OF 90° WITH A STRAIGHT LINE BETWEEN THE SIGN AND THE POINT AT WHICH THE SIGN SHALL BE READ.

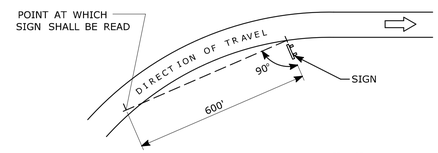

DIAGRAM "B"

SIGN ORIENTATION DETAILS FOR SIDE MOUNTED SIGNS ON STRUCTURAL STEEL BREAKAWAY SIGN SUPPORTS

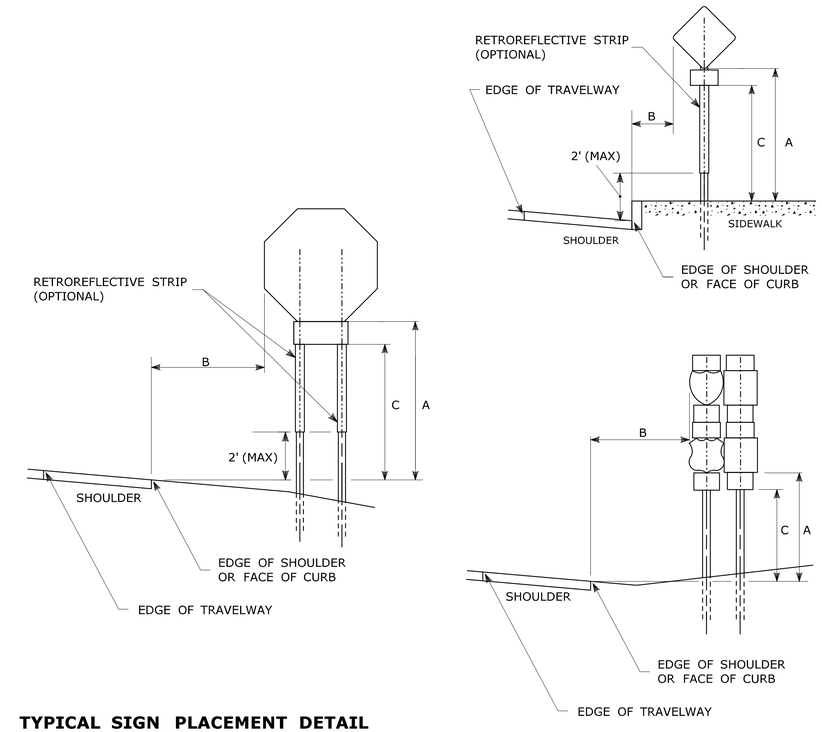

TYPICAL SIGN PLACEMENT DETAIL

NOTES:

ALL SIGNS AND SHIELDS ON DIRECTIONAL ASSEMBLIES SHALL ABUT VERTICALLY.

REFER TO STANDARD SHEET No. TR-1208_02 "METAL SIGN POSTS AND SIGN MOUNTING DETAILS" FOR SIGN POSTS AND SIGN MOUNTING.

IF A RETFOREFLECTIVE STRIP IS USED ON SIGN SUPPORT, IT SHALL BE PLACED FOR THE FULL LENGTH OF THE SUPPORT FROM THE BOTTOM OF THE SIGN TO WITHIN 2 FT ABOVE THE EDGE OF THE ROADWAY.

PARKING SIGNS TYPICALLY USE 45° MOUNTING BRACKET.

DIM."A" MIN SIGN HEIGHT	DIM."B" MIN LATERAL OFFSET ①	DIM."C" MIN PLAQUE HEIGHT ①	ASSEMBLY LOCATION
7' ②	6' 12' ③	5'	SIGNS ON FREEWAYS AND EXPRESSWAYS EXCEPT CHEVRON ALIGNMENT SIGNS, ONE-DIRECTION LARGE ARROW SIGNS, DO NOT ENTER SIGNS, AND WRONG WAY SIGNS
5'	2'	4'	• SIGNS IN RURAL AREAS • DO NOT ENTER AND WRONG WAY SIGNS ALONG EXIT RAMPS • DO NOT ENTER AND WRONG WAY SIGNS ON LIMITED ACCESS HIGHWAYS
5'	2'	N/A	• CHEVRON ALIGNMENT SIGNS LOCATED ON FREEWAYS, EXPRESSWAYS, RAMPS, AND IN RURAL AREAS • ONE-DIRECTION LARGE ARROW SIGNS LOCATED ON FREEWAYS, EXPRESSWAYS, RAMPS, AND IN RURAL AREAS
4'	6' 12' ③	N/A	INCIDENT MANAGEMENT SIGNS AND MILE POST MARKER ASSEMBLIES LOCATED ON FREEWAYS AND EXPRESSWAYS
4'	2'	4'	CENTRAL ISLANDS OF ROUNDABOUTS
7'	2' ④	6'	BUSINESS & RESIDENTIAL AREAS WHERE PARKING OR OTHER OBSTRUCTIONS LIMIT VISIBILITY
7'	2' ④	7'	SIDEWALKS ⑤

① OR AS DIRECTED BY THE ENGINEER

② 8 FT MINIMUM HEIGHT REQUIRED IF A SUPPLEMENTAL PLAQUE IS SUBMOUNTED BELOW THE MAJOR SIGN.

③ 6 FT FROM EDGE OF SHOULDER, WHEN SHOULDER IS OVER 6 FT WIDE
12 FT FROM EDGE OF TRAVELWAY, WHEN SHOULDER IS LESS THAN 6 FT WIDE.

④ A LATERAL OFFSET OF AT LEAST 1 FT FROM THE FACE OF THE CURB MAY BE USED WHERE SIDEWALK WIDTH IS LIMITED OR WHERE EXISTING UTILITY POLES ARE CLOSE TO THE CURB.

⑤ A CLEAR PATH OF NOT LESS THAN 4 FT SHALL BE PROVIDED IN SIDEWALK AREAS.

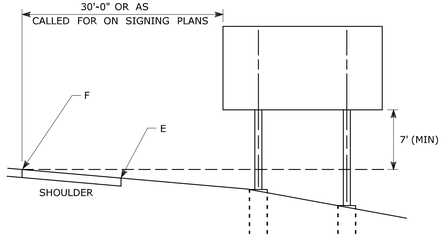

TYPICAL PLACEMENT OF SIDE MOUNTED SIGNS ON STRUCTURAL STEEL BREAKAWAY SIGN SUPPORTS

NOTES:

1) MIN. VERTICAL CLEARANCE ABOVE SIDEWALKS SHALL BE 7'.
2) WHERE GUIDE RAIL IS USED, THE OFFSET TO THE NEAR EDGE OF SIGN FACE SHALL BE AS SHOWN ELSEWHERE IN THE CONTRACT PLANS.
3) ON INTERSECTING ROADS AT RAMP TERMINI, THE OFFSET TO THE NEAR EDGE OF OF SIGN FACE SHALL BE 6' MIN. FROM POINT "E".
4) IF 30'-0" MIN. CANNOT BE MET, PLEASE CONTACT THE ENGINEER.

RETROREFLECTIVE STRIPS 48" LONG OR LESS:

RETROREFLECTIVE STRIPS OVER 48" LONG:

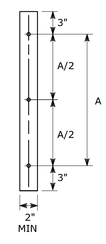

RETROREFLECTIVE STRIP DETAIL

NOTES:

RETROREFLECTIVE STRIPS WHICH ARE 48 IN LONG OR LESS SHALL BE ATTACHED USING 2 BOLTS AND RETROREFLECTIVE STRIPS OVER 48 IN LONG SHALL BE ATTACHED USING 3 BOLTS AS SHOWN ON THE DETAILS ABOVE.
REFER TO STANDARD SHEET No. TR-1208_02 "METAL SIGN POSTS AND SIGN MOUNTING DETAILS" FOR MOUNTING DETAILS.

RETROREFLECTIVE STRIP COLOR SHALL MATCH THE BACKGROUND COLOR OF THE SIGN, EXCEPT THAT THE COLOR OF THE STRIP FOR "YIELD" AND "DO NOT ENTER" SIGNS SHALL BE RED.

REV.	DATE	REVISION DESCRIPTION
3	8-2018	INCLUDED INCIDENT MANAGEMENT AND MILE MARKER SIGNS.
2	4-2017	MINOR REVISIONS.
1	2-2011	MINOR REVISIONS.

THE INFORMATION, INCLUDING ESTIMATED QUANTITIES OF WORK, SHOWN ON THESE SHEETS IS BASED ON LIMITED INVESTIGATIONS BY THE STATE AND IS IN NO WAY WARRANTED TO INDICATE THE CONDITIONS OF ACTUAL QUANTITIES OF WORK WHICH WILL BE REQUIRED.

Plotted Date: 8/10/2018

NOT TO SCALE

STATE OF CONNECTICUT
DEPARTMENT OF TRANSPORTATION

Filename: TR_1208_01_1_2018.dgn Model: TR-1208_01

SUBMITTED BY: NAME/DATE/TIME: Mark F. Makuch, P.E. 2018.08.17 09:06:06-04'00'

APPROVED BY: NAME/DATE/TIME: Mark F. Carlino, P.E. 2018.08.21 07:48:06-04'00'

CTDOT STANDARD SHEET

OFFICE OF ENGINEERING

STANDARD SHEET TITLE:

SIGN PLACEMENT AND RETROREFLECTIVE STRIP DETAILS

STANDARD SHEET NO.: TR-1208_01

TYPICAL METAL SIGN POSTS

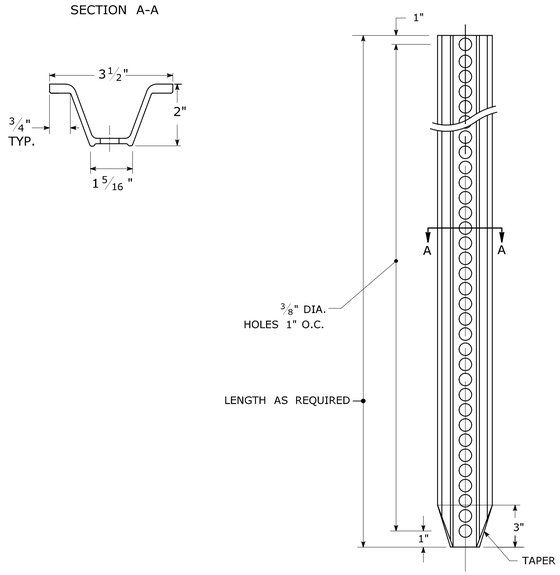

TYPICAL SIGN PANEL ATTACHMENT

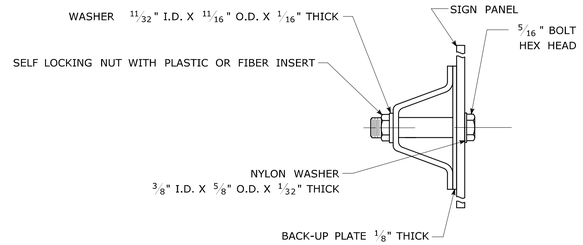

TYPICAL BACK TO BACK SIGN PANEL ATTACHMENT

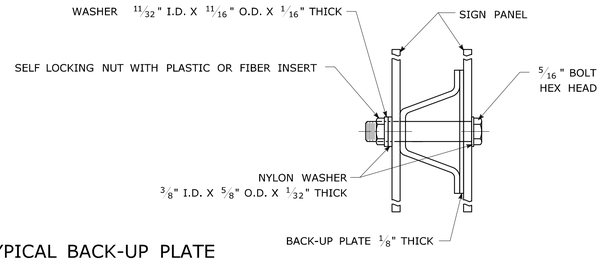

TYPICAL BACK-UP PLATE

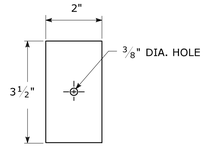

BOLTS - STAINLESS STEEL CONFORMING TO ASTM F593, ALLOY GROUP 1 OR 2 (ALLOY TYPES 304 OR 316).
SELF LOCKING NUTS - STAINLESS STEEL CONFORMING TO ASTM F594, ALLOY GROUP 1 OR 2 (ALLOY TYPES 304 OR 316).
WASHERS - STAINLESS STEEL CONFORMING TO ASTM A240, (ALLOY TYPES 304 OR 316).

METAL DELINEATOR POST

WT./FT. = 1.12 LBS./FT. MIN.

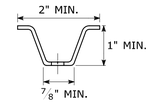

SECTION C-C

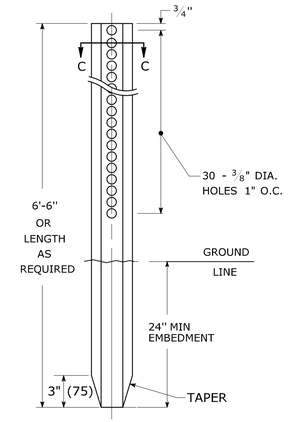

GENERAL NOTES:

1. STEEL FOR DELINEATOR POSTS SHALL BE ASTM A36 STEEL. STEEL FOR ALL OTHER POSTS SHALL CONFORM TO THE MECHANICAL REQUIREMENTS OF ASTM A 499 GRADE 80 AND TO THE CHEMICAL REQUIREMENTS OF ASTM A1 CARBON STEEL TEE RAIL HAVING NOMINAL WEIGHT (MASS) OF 91 LBS. OR GREATER PER LINEAR YARD.
2. AFTER FABRICATION, ALL STEEL POSTS, STRAPS AND PLATES SHALL BE GALVANIZED TO MEET THE REQUIREMENTS OF ASTM A123.
3. WASHERS FOR BREAKAWAY INSTALLATIONS SHALL MEET ASTM F436, TYPE 1.
4. SPACER BAR FOR BREAKAWAY INSTALLATION SHALL CONFORM TO THE MECHANICAL REQUIREMENTS OF ASTM A36.
5. ALL BOLTS, NUTS, AND WASHERS FOR BREAKAWAY INSTALLATIONS SHALL BE GALVANIZED TO MEET THE REQUIREMENTS OF ASTM A153.
6. ALL SIGN POSTS SHALL HAVE BREAKAWAY FEATURES THAT MEET AASHTO REQUIREMENTS CONTAINED IN THE CURRENT "STANDARD SPECIFICATIONS FOR STRUCTURAL SUPPORTS FOR HIGHWAY SIGNS, LUMINAIRES AND TRAFFIC SIGNALS." THE BREAKAWAY FEATURES SHALL BE STRUCTURALLY ADEQUATE TO CARRY THE SIGNS SHOWN IN THE PLANS AT 60 mph WIND LOADINGS. INSTALLATIONS SHALL BE IN ACCORDANCE WITH MANUFACTURERS RECOMMENDATIONS.
7. SIGN POSTS SHALL BE 4 LBS./FT.

BREAKAWAY INSTALLATION

FOR 4 LBS./FT. POSTS

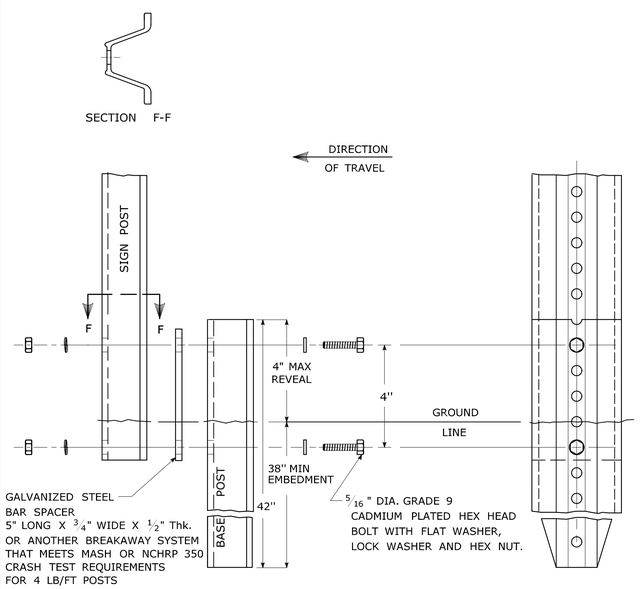

TYPICAL SIGN POST INSTALLATION IN LEDGE

LEDGE SHALL BE REMOVED TO DRIVE THE BASE POST TO A DEPTH OF 38".

HOLE SHALL BE FILLED WITH SUB-BASE MATERIAL AND COMPACTED WITH A TAMPING BAR, OR TECHNIQUE APPROVED BY THE ENGINEER, PRIOR TO BASE POST INSTALLATION.

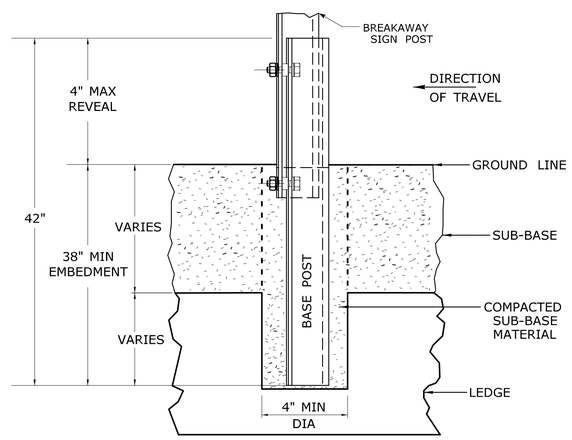

TYPICAL SLEEVE FOR PAVED AREAS

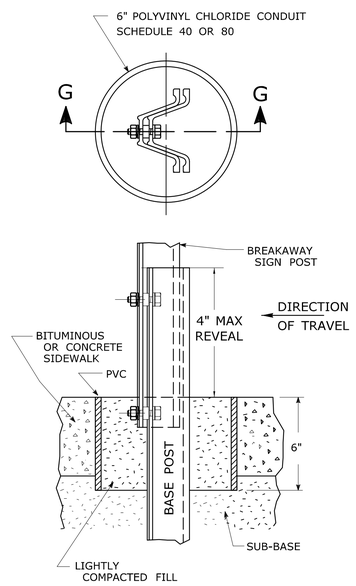

45° MOUNTING BRACKET FOR INSTALLATION OF PARKING SIGNS

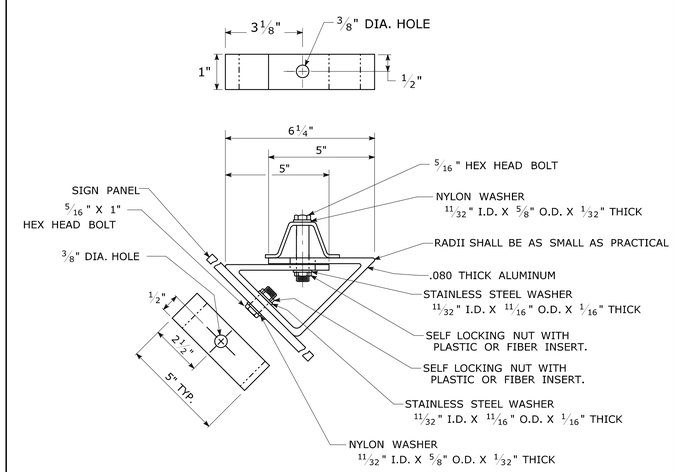

REV.	DATE	REVISION DESCRIPTION
2	6-2017	SIGN POST REVISIONS.
1	2-2011	MINOR REVISIONS.

THE INFORMATION, INCLUDING ESTIMATED QUANTITIES OF WORK, SHOWN ON THESE SHEETS IS BASED ON LIMITED INVESTIGATIONS BY THE STATE AND IS IN NO WAY WARRANTED TO INDICATE THE CONDITIONS OF ACTUAL QUANTITIES OF WORK WHICH WILL BE REQUIRED.

Plotted Date: 6/6/2017

NOT TO SCALE

STATE OF CONNECTICUT
DEPARTMENT OF TRANSPORTATION

Filename: TR-1208_02_May_2017_Revision.dgn Model: TR-1208_02

SUBMITTED BY: NAME/DATE/TIME:
Mark F. Makuch, P.E. 2017.06.07 07:30:30-04'00'
Mary E. Baker, P.E. 2017.06.13 15:28:14-04'00'
APPROVED BY: NAME/DATE/TIME:
Gregory M. Dorosh, P.E. 2017.06.15 09:27:29-04'00'

CTDOT
STANDARD SHEET

OFFICE OF ENGINEERING

STANDARD SHEET TITLE:

METAL SIGN POSTS AND SIGN MOUNTING DETAILS

GUIDE SHEET NO.: TR-1208_02

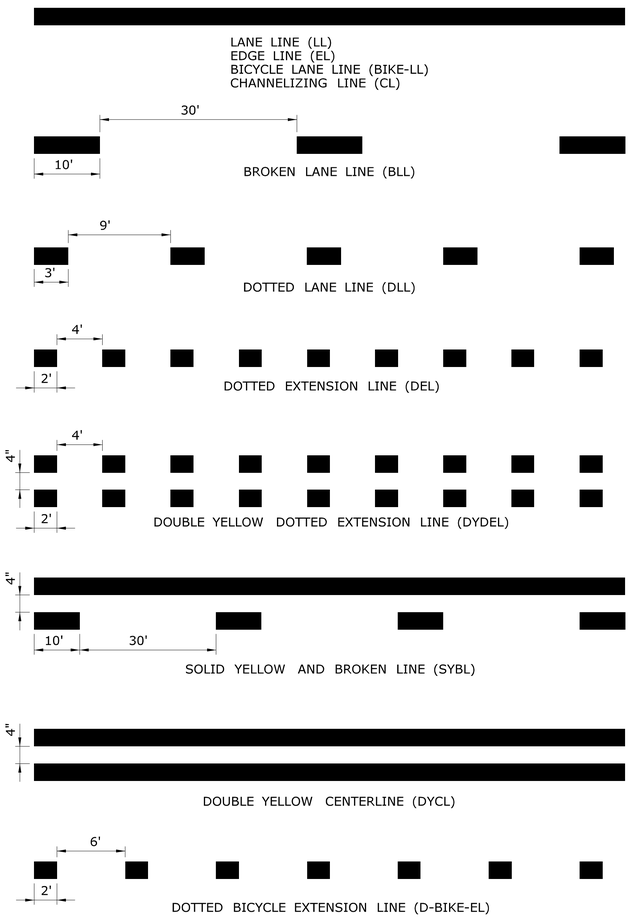

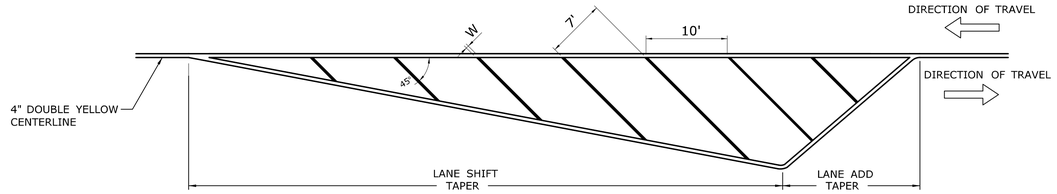

CROSS HATCHED ISLAND DETAIL
(YELLOW)

W IS TO BE 6" WHEN POSTED SPEED ≤ 45 MPH
W IS TO BE 12" WHEN POSTED SPEED > 45 MPH
CROSS HATCHED ISLANDS ARE TO BE INSTALLED WHERE CALLED FOR ON THE PLANS

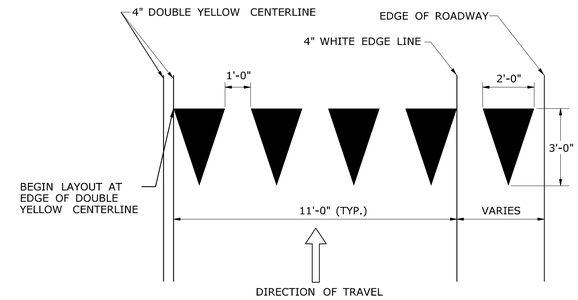

YIELD LINE DETAIL
(WHITE)

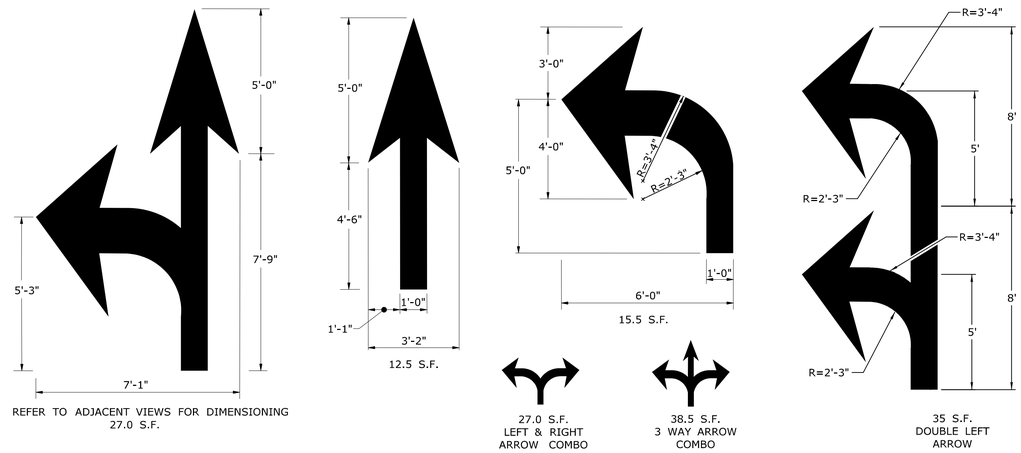

PAVEMENT ARROW DETAILS
(WHITE)
ARROWS SHALL BE CENTERED IN TRAVEL LANE

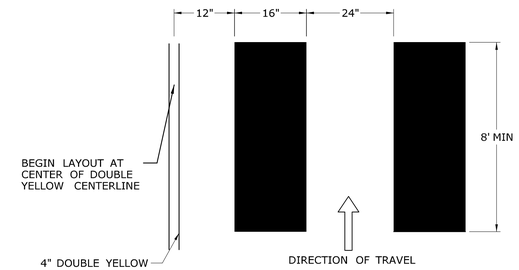

CROSSWALK DETAIL
(WHITE)

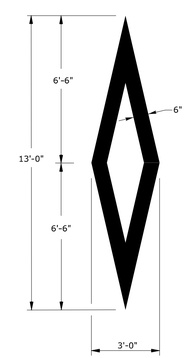

WHITE PREFERENTIAL LANE SYMBOL
13.0 S.F.

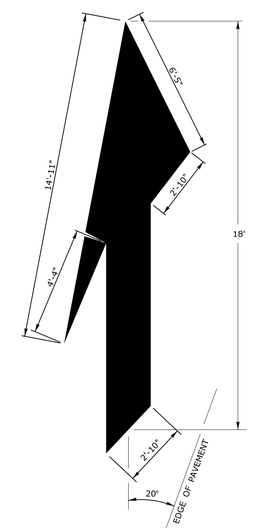

WHITE LANE REDUCTION ARROW
41.8 S.F.

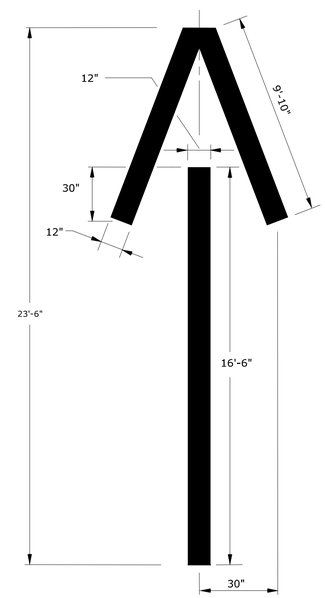

WHITE WRONG WAY PAVEMENT ARROW
36.2 S.F.

NOTES :

1. AREA OF PAVEMENT MARKINGS AS INDICATED IS APPROXIMATE.
2. RIGHT TURN PAVEMENT MARKING ARROWS ARE MIRROR IMAGE OF LEFT TURN PAVEMENT MARKING ARROWS.

REV.	DATE	REVISION DESCRIPTION
1	8-2018	REMOVED ROUNDABOUT MARKINGS.

THE INFORMATION, INCLUDING ESTIMATED QUANTITIES OF WORK, SHOWN ON THESE SHEETS IS BASED ON LIMITED INVESTIGATIONS BY THE STATE AND IS IN NO WAY WARRANTED TO INDICATE THE CONDITIONS OF ACTUAL QUANTITIES OF WORK WHICH WILL BE REQUIRED.

Plotted Date: 8/10/2018

NOT TO SCALE

STATE OF CONNECTICUT
DEPARTMENT OF TRANSPORTATION

Filename: TR-1210_04.dgn Model: CT_Civil_2D_Sheet

SUBMITTED BY: NAME/DATE/TIME: Mark F. Makuch, P.E. 2018.08.17 09:07:44-04'00'

APPROVED BY: NAME/DATE/TIME: Mark F. Carlino, P.E. 2018.08.21 07:48:45-04'00'

CTDOT
STANDARD SHEET

OFFICE OF ENGINEERING

STANDARD SHEET TITLE:
PAVEMENT MARKING LINES AND SYMBOLS

STANDARD SHEET NO.:
TR-1210_04

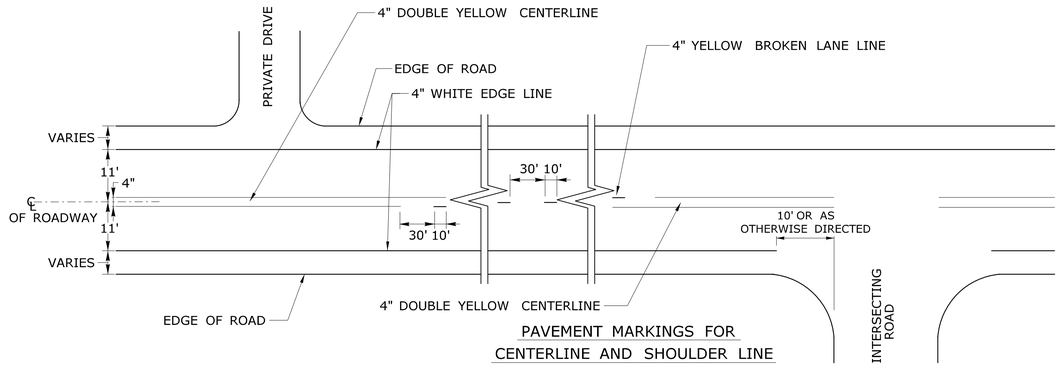

PAVEMENT MARKINGS FOR CENTERLINE AND SHOULDER LINE

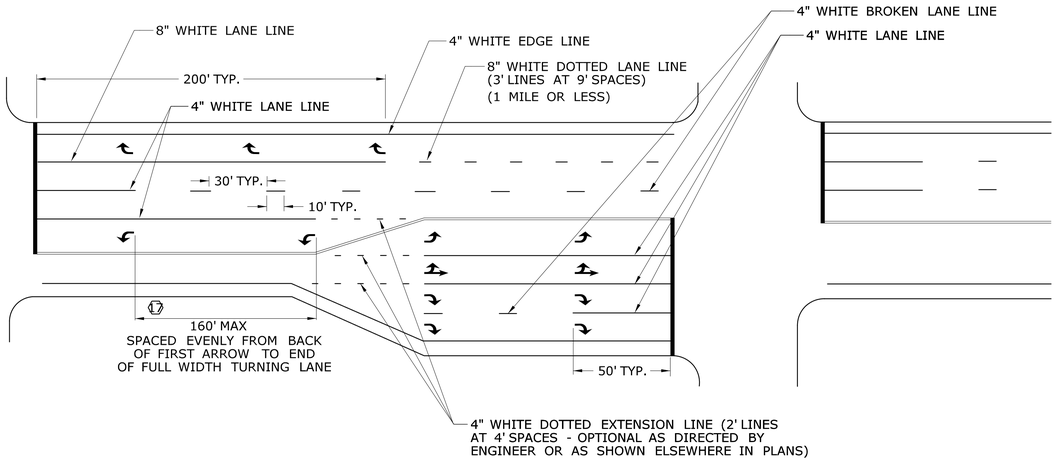

PAVEMENT MARKINGS FOR TURNING LANES AND ROAD LANE-DROP

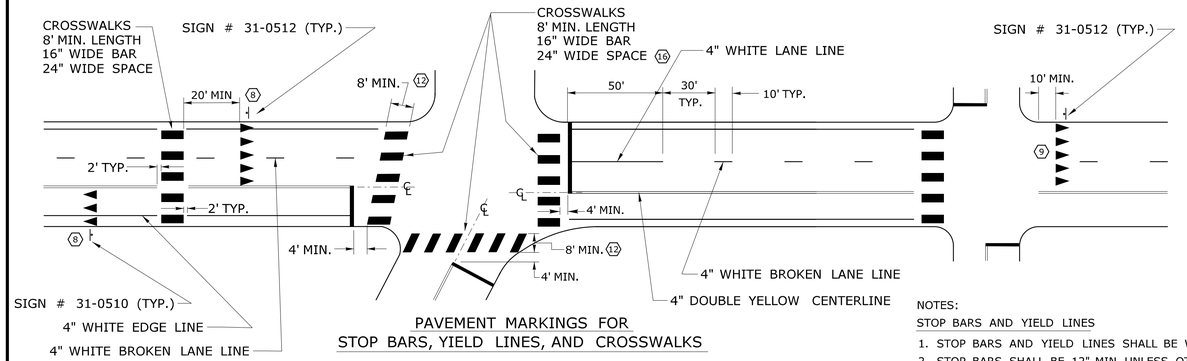

PAVEMENT MARKINGS FOR STOP BARS, YIELD LINES, AND CROSSWALKS

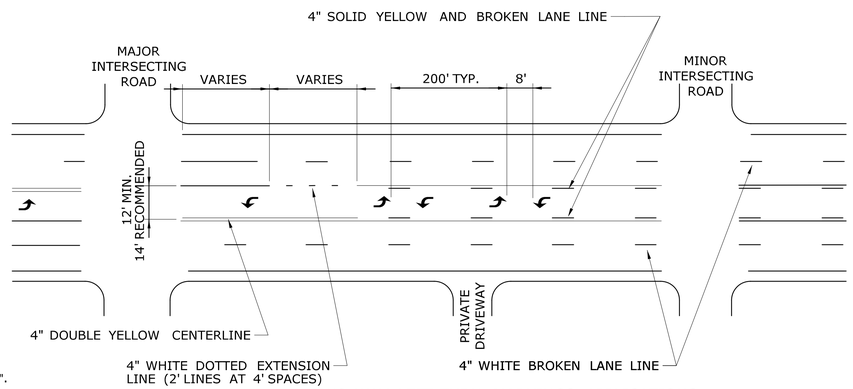

TWO-WAY LEFT-TURN MARKINGS APPLICATIONS

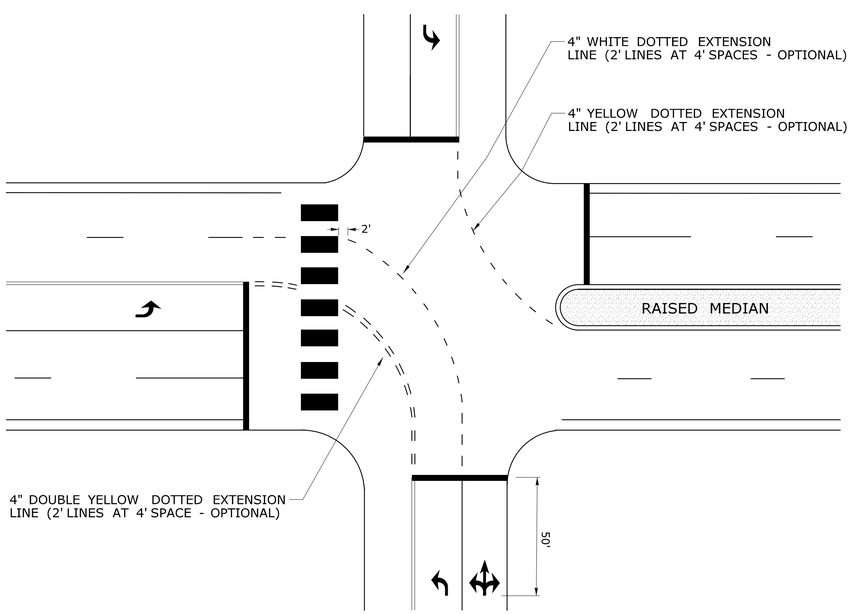

TURNING EXTENSIONS

NOTES:

STOP BARS AND YIELD LINES

1. STOP BARS AND YIELD LINES SHALL BE WHITE.
2. STOP BARS SHALL BE 12" MIN. UNLESS OTHERWISE NOTED ON PLANS.
3. STOP BARS TO BE PLACED A MINIMUM OF 4' IN ADVANCE OF THE NEAREST EDGE OF CROSSWALK AND SHOULD BE PLACED 90° TO THE CENTERLINE OF THE ROADWAY.
4. IN THE ABSENCE OF A MARKED CROSSWALK THE STOP BAR SHOULD BE PLACED 90° TO THE CENTERLINE OF THE ROADWAY, AT THE DESIRED STOPPING POINT AT LEAST 5' AND NO MORE THAN 30' FROM THE NEAREST EDGE OF THE INTERSECTING ROADWAY.
5. THE STOP SIGN SHOULD BE PLACED IN LINE WITH THE STOP BAR. HOWEVER, IF THE STOP SIGN CANNOT BE LOCATED EXACTLY WHERE VEHICLES ARE EXPECTED TO STOP, THE STOP BAR SHOULD BE PLACED AT THE STOPPING POINT.
6. FOR STOP BARS AT RAMPS SEE DETAILS "R", "S", "T", & "U" AND NOTES ON TRAFFIC STANDARD SHEET TR-1210 07 "PAVEMENT MARKINGS FOR DIVIDED HIGHWAYS EXIT RAMPS".
7. FOR YIELD LINE INSTALLATIONS, ONLY FULL TRIANGLES ARE TO BE INSTALLED.

8. MID-BLOCK CROSSWALKS ARE CROSSWALKS LOCATED MORE THAN 50 FEET FROM A SIGNALIZED OR UNSIGNALIZED INTERSECTION. YIELD LINES ASSOCIATED WITH MIDBLOCK CROSSWALKS SHALL BE INSTALLED AND SHOULD BE LOCATED 20 TO 50 FEET IN ADVANCE OF THE NEAREST CROSSWALK LINE OR AS DIRECTED BY THE ENGINEER.
WHERE A YIELD LINE EXISTS ON AN APPROACH TO A CROSSWALK, THE APPROAPRIATE "YIELD TO PEDESTRIANS" SIGN IS REQUIRED.

9. FOR CROSSWALKS AT UNSIGNALIZED INTERSECTIONS WITH MINOR STREET STOP CONTROL, YIELD LINES SHALL BE INSTALLED ON MULTI-LANE APPROACHES, BUT NOT SINGLE LANE APPROACHES.

10. THE YIELD SIGN SHOULD BE PLACED IN LINE WITH A YIELD LINE. HOWEVER, IF THE YIELD SIGN CANNOT BE LOCATED EXACTLY WHERE VEHICLES ARE EXPECTED TO YIELD, THE YIELD LINE SHOULD BE PLACED AT THE YIELDING POINT.

CROSSWALKS

11. CROSSWALK MARKINGS SHALL BE WHITE.

12. AT LOCATIONS WHERE THE CROSSWALK IS SKEWED, BARS TO BE PARALLEL TO ℄ AND ENDS OF BARS TO BE PARALLEL. THE LENGTH OF THE BARS WILL VARY DEPENDING ON THE ANGLE OF SKEW.

13. BARS SHOULD BE NO CLOSER THAN 1' FROM EDGE OF ROAD.
14. ONLY FULL LENGTH BARS ARE TO BE INSTALLED.
15. DECORATIVE CROSSWALKS SHALL BE BANDED FROM CURB TO CURB WITH A MINIMUM 12" WIDE WHITE TRANSVERSE LINE ALONG EACH EDGE.

16. 24" WIDE SPACE TO BE CENTERED ON YELLOW CENTERLINE.

PAVEMENT MARKINGS FOR TURNING LANES

17. INSTALL AT LEAST TWO ARROWS PER LANE WHERE STORAGE LENGTH IS GREATER THAN 150 FEET.

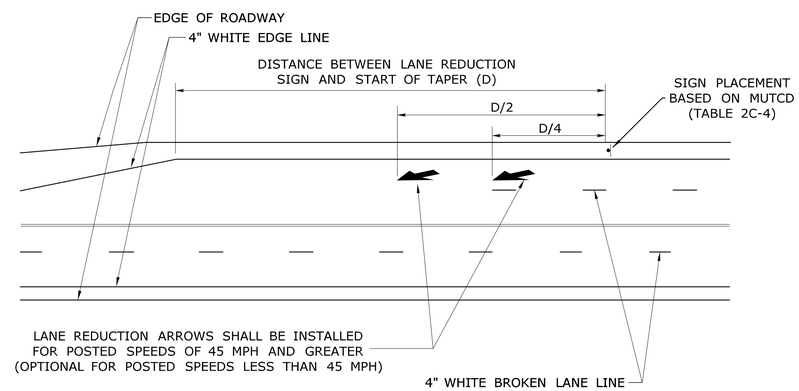

LANE REDUCTION TRANSITIONS

REV.	DATE	REVISION DESCRIPTION
1	8-2018	REVISED YIELD LINE SIGNAGE AND NOTES.

THE INFORMATION, INCLUDING ESTIMATED QUANTITIES OF WORK, SHOWN ON THESE SHEETS IS BASED ON LIMITED INVESTIGATIONS BY THE STATE AND IS IN NO WAY WARRANTED TO INDICATE THE CONDITIONS OF ACTUAL QUANTITIES OF WORK WHICH WILL BE REQUIRED.

Plotted Date: 8/10/2018

NOT TO SCALE

STATE OF CONNECTICUT
DEPARTMENT OF TRANSPORTATION

Filename: TR-1210_08.DGN Model: TR-1210_05

SUBMITTED BY: NAME/DATE/TIME: Mark F. Makuch, P.E. 2018.08.17 09:10:18-04'00'

APPROVED BY: NAME/DATE/TIME: Mark F. Carlino, P.E. 2018.08.21 07:49:18-04'00'

CTDOT STANDARD SHEET

OFFICE OF ENGINEERING

STANDARD SHEET TITLE:

PAVEMENT MARKINGS FOR NON FREEWAYS

STANDARD SHEET NO.: TR-1210_08

E5 - SERIES

E5-1

EXIT

COPY & BORDER - WHITE
BACKGROUND - GREEN

	AREA (SQ. FT)	SIZE (INCHES)	CONN. D.O.T. #	POSTS
	16.0	48	51-6147	2

16 - SERIES

CONSTRUCTION AHEAD
ROAD USE RESTRICTED
STATE LIABILITY LIMITED
GENERAL STATUTES SEC 13a-115, 13a-145
COMMISSIONER OF TRANSPORTATION

	AREA (SQ. FT)	SIZE (INCHES)	CONN. D.O.T. #	POSTS
16-M	5.0	30X24	80-1613	1
16-H	17.5	60X42	80-1608	2
16-E	35.0	84X60	80-1605	2

CONSTRUCTION AHEAD
SIDEWALK USE RESTRICTED
STATE LIABILITY LIMITED
GENERAL STATUTES SEC 13a-115, 13a-145
COMMISSIONER OF TRANSPORTATION

	AREA (SQ. FT)	SIZE (INCHES)	CONN. D.O.T. #	POSTS
16-S	10.0	48X30	80-1619	2

G20 - SERIES

G20-2a

END ROAD WORK

	AREA (SQ. FT)	SIZE (INCHES)	CONN. D.O.T. #	POSTS
	8.0	48X24	80-9612	2

ROAD WORK NEXT 0 MILE(S) BE PREPARED TO STOP

VARIABLE MILEAGE

	AREA (SQ. FT)	SIZE (INCHES)	CONN. D.O.T. #	POSTS
	90.0	120X108	80-9728	

WORK AREA BE PREPARED TO STOP

	AREA (SQ. FT)	SIZE (INCHES)	CONN. D.O.T. #	POSTS
	9.0	36	80-9711	1
	16.0	48	80-9712	2

NEXT 0 MILES

VARIABLE MILEAGE

	AREA (SQ. FT)	SIZE (INCHES)	CONN. D.O.T. #	POSTS
	7.0	72X14	80-9720	

BUSINESS ACCESS

VARIABLE ARROW
COPY & BORDER - WHITE
BACKGROUND - BLUE

	AREA (SQ. FT)	SIZE (INCHES)	CONN. D.O.T. #	POSTS
	9.0	36	50-5934	2

M4 - SERIES

M4-8

DETOUR

	AREA (SQ. FT)	SIZE (INCHES)	CONN. D.O.T. #	POSTS
	2.0	24X12	80-9707	1

M4-9b

DETOUR

VARIABLE ARROW

	AREA (SQ. FT)	SIZE (INCHES)	CONN. D.O.T. #	POSTS
	5.0	30X24	80-9703	1

M4-8a

END DETOUR

	AREA (SQ. FT)	SIZE (INCHES)	CONN. D.O.T. #	POSTS
	3.0	24X18	80-9708	1

M4-9b

DETOUR

VARIABLE ARROW

	AREA (SQ. FT)	SIZE (INCHES)	CONN. D.O.T. #	POSTS
	6.25	30X30	80-9706	1

M4-10

(R) DETOUR
(L) DETOUR

	AREA (SQ. FT)	SIZE (INCHES)	CONN. D.O.T. #	POSTS
	6.0	48X18	80-9701R	2
	6.0	48X18	80-9702L	2

DETOUR

VARIABLE ARROW

	AREA (SQ. FT)	SIZE (INCHES)	CONN. D.O.T. #	POSTS
	5.0	30X24	80-9710	1

R1 - SERIES

R1-1

STOP

COPY & BORDER - WHITE
BACKGROUND - RED

	AREA (SQ. FT)	SIZE (INCHES)	CONN. D.O.T. #	POSTS
	5.19	30	31-0552	1
	13.30	48	31-0557	2

R1-2

YIELD

COPY & BORDER - RED
BACKGROUND - WHITE

	AREA (SQ. FT)	SIZE (INCHES)	CONN. D.O.T. #	POSTS
	3.90	36	31-0523	1
	10.83	60	31-0528	2

R4 - SERIES

R4-7

COPY & BORDER - BLACK
BACKGROUND - WHITE

	AREA (SQ. FT)	SIZE (INCHES)	CONN. D.O.T. #	POSTS
	5.0	24X30	31-1526	1

R4-9

STAY IN LANE

COPY & BORDER - BLACK
BACKGROUND - WHITE

	AREA (SQ. FT)	SIZE (INCHES)	CONN. D.O.T. #	POSTS
	5.0	24X30	31-1517	1
	12.0	36X48	31-1518	1
	20.0	48X60	31-1519	2

R9 & R11 - SERIES

R9-9

SIDEWALK CLOSED

COPY & BORDER - BLACK
BACKGROUND - WHITE

	AREA (SQ. FT)	SIZE (INCHES)	CONN. D.O.T. #	POSTS
	3.75	30X18	80-9076	1

R11-3a

ROAD CLOSED
00 MILES AHEAD
LOCAL TRAFFIC ONLY

VARIABLE MILEAGE
COPY & BORDER - BLACK
BACKGROUND - WHITE

	AREA (SQ. FT)	SIZE (INCHES)	CONN. D.O.T. #	POSTS
	12.5	60X30	80-9077	2

R9-11

SIDEWALK CLOSED AHEAD
CROSS HERE

VARIABLE ARROW
COPY & BORDER - BLACK
BACKGROUND - WHITE

	AREA (SQ. FT)	SIZE (INCHES)	CONN. D.O.T. #	POSTS
	3.0	24X18	80-9074	1

R11-3b

BRIDGE CLOSED
00 MILES AHEAD
LOCAL TRAFFIC ONLY

VARIABLE MILEAGE
COPY & BORDER - BLACK
BACKGROUND - WHITE

	AREA (SQ. FT)	SIZE (INCHES)	CONN. D.O.T. #	POSTS
	12.5	60X30	80-9078	2

R9-11a

SIDEWALK CLOSED
CROSS HERE

VARIABLE ARROW
COPY & BORDER - BLACK
BACKGROUND - WHITE

	AREA (SQ. FT)	SIZE (INCHES)	CONN. D.O.T. #	POSTS
	2.0	24X12	80-9075	1

R11-3b

ROAD CLOSED TO THRU TRAFFIC

COPY & BORDER - BLACK
BACKGROUND - WHITE

	AREA (SQ. FT)	SIZE (INCHES)	CONN. D.O.T. #	POSTS
	12.5	60X30	80-9081	2

R11-2

ROAD CLOSED

COPY & BORDER - BLACK
BACKGROUND - WHITE

	AREA (SQ. FT)	SIZE (INCHES)	CONN. D.O.T. #	POSTS
	10.0	48X30	80-9080	2

ROAD WORK AHEAD
FINES DOUBLED

COPY & BORDER - BLACK
BACKGROUND - WHITE

	AREA (SQ. FT)	SIZE (INCHES)	CONN. D.O.T. #	POSTS
	14.0	48X42	31-1906	2
	22.5	60X54	31-1907	2

W1 - SERIES

W1-4

(L) (R)

	AREA (SQ. FT)	SIZE (INCHES)	CONN. D.O.T. #	POSTS
	9.0	36	80-9432L	1
	9.0	36	80-9431R	1
	16.0	48	80-9452L	2
	16.0	48	80-9451R	2

W1-6

(L or R)

	AREA (SQ. FT)	SIZE (INCHES)	CONN. D.O.T. #	POSTS
	8.0	48X24	80-9424	2
	12.5	60X30	80-9423	2

W1-8

	AREA (SQ. FT)	SIZE (INCHES)	CONN. D.O.T. #	POSTS
	3.0	18X24	80-9401	1
	5.0	24X30	80-9403	1
	7.5	30X36	80-9404	1

BOTH LANES SHIFT LEFT AHEAD (L)
BOTH LANES SHIFT RIGHT AHEAD (R)

	AREA (SQ. FT)	SIZE (INCHES)	CONN. D.O.T. #	POSTS
	16.0	48	80-9433L	2
	16.0	48	80-9435R	2

AHEAD (L) AHEAD (R)

	AREA (SQ. FT)	SIZE (INCHES)	CONN. D.O.T. #	POSTS
	25.0	60	80-9483L	2
	25.0	60	80-9485R	2

BOTH LANES SHIFT LEFT (L)
BOTH LANES SHIFT RIGHT (R)

	AREA (SQ. FT)	SIZE (INCHES)	CONN. D.O.T. #	POSTS
	16.0	48	80-9434L	2
	16.0	48	80-9436R	2

W1-4c

(L) (R)

	AREA (SQ. FT)	SIZE (INCHES)	CONN. D.O.T. #	POSTS
	25.0	60	80-9484L	2
	25.0	60	80-9486R	2

AHEAD (L) AHEAD (R)

	AREA (SQ. FT)	SIZE (INCHES)	CONN. D.O.T. #	POSTS
	25.0	60	80-9443L	2
	25.0	60	80-9445R	2

W1-4b

(L) (R)

	AREA (SQ. FT)	SIZE (INCHES)	CONN. D.O.T. #	POSTS
	25.0	60	80-9444L	2
	25.0	60	80-9446R	2

W3 - SERIES

W3-1

OCTAGON - RED W/ WHITE BORDER
ARROW & BORDER - BLACK
BACKGROUND - FLUORESCENT ORANGE

	AREA (SQ. FT)	SIZE (INCHES)	CONN. D.O.T. #	POSTS
	9.0	36	80-9050	1
	16.0	48	80-9051	2

W3-2

TRIANGLE - RED W/ WHITE BORDER
ARROW & BORDER - BLACK
BACKGROUND - FLUORESCENT ORANGE

	AREA (SQ. FT)	SIZE (INCHES)	CONN. D.O.T. #	POSTS
	9.0	36	80-9054	1
	16.0	48	80-9055	2

W3-3

TOP CIRCLE - RED
MIDDLE CIRCLE - YELLOW
BOTTOM CIRCLE - GREEN
COPY & BORDER - BLACK
BACKGROUND - FLUORESCENT ORANGE

	AREA (SQ. FT)	SIZE (INCHES)	CONN. D.O.T. #	POSTS
	9.0	36	80-9052	1
	16.0	48	80-9053	2

W4-W6 - SERIES

W4-2

(L) (R)

	AREA (SQ. FT)	SIZE (INCHES)	CONN. D.O.T. #	POSTS
	16.0	48	80-9918L	2
	16.0	48	80-9917R	2

W6-3

	AREA (SQ. FT)	SIZE (INCHES)	CONN. D.O.T. #	POSTS
	16.0	48	80-9945	2

W8-W9 - SERIES

W8-1

BUMP

	AREA (SQ. FT)	SIZE (INCHES)	CONN. D.O.T. #	POSTS
	9.0	36	80-9901	1
	16.0	48	80-9902	2

BUMP AHEAD

	AREA (SQ. FT)	SIZE (INCHES)	CONN. D.O.T. #	POSTS
	9.0	36	80-9801	1
	16.0	48	80-9802	2

W9-2

LANE ENDS MERGE LEFT (L)
LANE ENDS MERGE RIGHT (R)

	AREA (SQ. FT)	SIZE (INCHES)	CONN. D.O.T. #	POSTS
	16.0	48	80-9910L	2
	16.0	48	80-9911R	2

W13 - SERIES

W13-1

00 M.P.H.

SUBPLATE
VARIABLE SPEED

	AREA (SQ. FT)	SIZE (INCHES)	CONN. D.O.T. #	POSTS
	4.0	24	80-9569	1
	6.25	30	80-9567	1

REDUCE SPEED TO 00 MPH

VARIABLE SPEED

	AREA (SQ. FT)	SIZE (INCHES)	CONN. D.O.T. #	POSTS
	9.0	36	80-9506	1
	16.0	48	80-9508	2

W3-5

SPEED LIMIT 00

VARIABLE SPEED

	AREA (SQ. FT)	SIZE (INCHES)	CONN. D.O.T. #	POSTS
	9.0	36	80-9520	1
	16.0	48	80-9521	2

W-16 - SERIES

W16-15P

NEW

COPY & BORDER - BLACK
BACKGROUND - ORANGE

	AREA (SQ. FT)	SIZE (INCHES)	CONN. D.O.T. #	POSTS
	2.0	24X12	80-9049	

W20 - SERIES

W20-1

ROAD WORK AHEAD

	AREA (SQ. FT)	SIZE (INCHES)	CONN. D.O.T. #	POSTS
	6.25	30	80-9602	1
	9.0	36	80-9603	1
	16.0	48	80-9604	2

LEFT LANES CLOSED (L)
RIGHT LANES CLOSED (R)

	AREA (SQ. FT)	SIZE (INCHES)	CONN. D.O.T. #	POSTS
(L)	16.0	48	80-9836	2
(R)	16.0	48	80-9839	2

W20-7a

	AREA (SQ. FT)	SIZE (INCHES)	CONN. D.O.T. #	POSTS
	9.0	36	80-9803	1
	16.0	48	80-9804	2

W20-1

ROAD WORK 0000 FT

VARIABLE DISTANCE

	AREA (SQ. FT)	SIZE (INCHES)	CONN. D.O.T. #	POSTS
	9.0	36	80-9614	1
	16.0	48	80-9615	2

LEFT TWO LANES CLOSED AHEAD (L)
RIGHT TWO LANES CLOSED AHEAD (R)

	AREA (SQ. FT)	SIZE (INCHES)	CONN. D.O.T. #	POSTS
(L)	16.0	48	80-9837	2
(R)	16.0	48	80-9838	2

SLOW MOVING TRUCKS AHEAD

	AREA (SQ. FT)	SIZE (INCHES)	CONN. D.O.T. #	POSTS
	32.0	96X48	80-9815	2

W20-2

DETOUR 1000 FT

	AREA (SQ. FT)	SIZE (INCHES)	CONN. D.O.T. #	POSTS
	9.0	36	80-9805	1
	16.0	48	80-9806	2

LEFT LANE CLOSED AHEAD (L)
RIGHT LANE CLOSED AHEAD (R)

	AREA (SQ. FT)	SIZE (INCHES)	CONN. D.O.T. #	POSTS
(L)	16.0	48	80-9847	2
(R)	16.0	48	80-9848	2

W16-9P

AHEAD

	AREA (SQ. FT)	SIZE (INCHES)	CONN. D.O.T. #	POSTS
	2.0	24X12	80-9870	
	3.75	30X18	80-9871	

ONE LANE ROAD AHEAD

	AREA (SQ. FT)	SIZE (INCHES)	CONN. D.O.T. #	POSTS
	9.0	36	80-9834	1
	16.0	48	80-9835	2

LEFT LANE CLOSED (L)
RIGHT LANE CLOSED (R)

	AREA (SQ. FT)	SIZE (INCHES)	CONN. D.O.T. #	POSTS
(L)	16.0	48	80-9846	2
(R)	16.0	48	80-9849	2

W16-3aP

1 MILE

VARIABLE MILEAGE

	AREA (SQ. FT)	SIZE (INCHES)	CONN. D.O.T. #	POSTS
	2.5	30X12	80-9872	
	4.5	36X18	80-9873	

W21 - SERIES

W21-6

SURVEY CREW

	AREA (SQ. FT)	SIZE (INCHES)	CONN. D.O.T. #	POSTS
	9.0	36	80-9607	1

W22 - SERIES

W22-1

BLASTING ZONE 1000 FT

	AREA (SQ. FT)	SIZE (INCHES)	CONN. D.O.T. #	POSTS
	9.0	36	80-9620	1
	16.0	48	80-9625	2

W22-2

TURN OFF 2-WAY RADIO AND CELL PHONE

	AREA (SQ. FT)	SIZE (INCHES)	CONN. D.O.T. #	POSTS
	10.5	42X36	80-9623	2

W22-3

END BLASTING ZONE

	AREA (SQ. FT)	SIZE (INCHES)	CONN. D.O.T. #	POSTS
	10.5	42X36	80-9621	2

(VARIABLE LEGEND)

	AREA (SQ. FT)	SIZE (INCHES)	CONN. D.O.T. #	POSTS
	4.17	60X10	80-9913	2
	12.0	96X18	80-9914	2
	3.33	48X10	80-9916	2

BLANK OR VARIABLE LEGEND

	AREA (SQ. FT)	SIZE (INCHES)	CONN. D.O.T. #	POSTS
	9.0	36	80-9933	1
	16.0	48	80-9934	2

(VARIABLE LEGEND)

	AREA (SQ. FT)	SIZE (INCHES)	CONN. D.O.T. #	POSTS
	12.5	60X30	80-9928	2
	24.0	72X48	80-9929	2

USE SHOULDER

	AREA (SQ. FT)	SIZE (INCHES)	CONN. D.O.T. #	POSTS
	16.0	48	80-9956	2

SHOULDER CLOSED AHEAD (1)
SHOULDER CLOSED (2)

	AREA (SQ. FT)	SIZE (INCHES)	CONN. D.O.T. #	POSTS
(1)	16.0	48	80-9957	2
(2)	9.0	36	80-9958	1
(2)	16.0	48	80-9959	2

STOP-SLOW PADDLE

SIDE A: STOP
SIDE B: SLOW

SIDE A
BACKGROUND - RED
COPY & BORDER - WHITE
SIDE B
BACKGROUND - ORANGE
COPY & BORDER - BLACK PLAIN

	AREA (SQ. FT)	SIZE (INCHES)	CONN. D.O.T. #	POSTS
	2.25	18	80-9950	PADDLE

NOTES:
1. R1-SERIES SIGN THE LEGEND "O.S.T.A." SHALL APPEAR.
2. POSTS - SEE STANDARD SHEET TR-1208_02 - "METAL SIGN POSTS AND SIGN MOUNTING DETAILS".
3. POSTS SHALL BE 4 LBS./FT.
4. ALL POSTS NOTED ARE FOR LONG TERM INSTALLATION. SEE STANDARD SHEET TR-1208_02.
5. FOR TEMPORARY SUPPORTS SEE STANDARD SHEET TR-1220_02 - "CONSTRUCTION SIGN SUPPORTS AND CHANNELIZING DEVICES".
6. FOR SPECIFIC SIGN DESIGN, CONTACT CONN. D.O.T., DIVISION OF TRAFFIC ENGINEERING. FOR BOLT HOLE PATTERN REFER TO FHWA PUBLICATION "STANDARD HIGHWAY SIGNS". SIGNS OF DIFFERENT DIMENSIONS TO BE ERECTED ON THE SAME POSTS, OR SPAN/MAST ARM MOUNTED, MAY REQUIRE SPECIAL BOLT HOLE PATTERNS.
7. ALL CONSTRUCTION SIGNS TO BE PAID FOR UNDER THE CONSTRUCTION SIGNS ITEM IN THE CONTRACT.
8. MATERIALS & COLORS SHALL CONFORM TO STATE SPECIFICATIONS.

MATERIALS:
SIGNS AND THEIR PORTABLE SUPPORTS SHALL CONFORM TO THE REQUIREMENTS OF NCHRP REPORT 350 (TL-3) OR THE AASHTO MASH FOR CATEGORY 2 DEVICES. ALUMINUM THICKNESS FOR POST MOUNTED SIGNS SHALL BE .100" EXCEPT SIGN #s. 80-1605, 80-9914, 80-9815, 80-9728, 80-9519, & 51-6147 (L OR R) WHICH SHALL BE .125", PLYWOOD THICKNESS FOR POST MOUNTED SIGNS SHALL BE 1/2" EXTERIOR GRADE A-C OR BETTER. SIGN BLANKS SHALL HAVE ONE COAT OF PRIMER PAINT PRIOR TO APPLICATION OF RETROREFLECTIVE SHEETING & COPY.

COLORS:
BACKGROUND - FLUORESCENT ORANGE - EXCEPT AS NOTED.
LEGEND - BLACK - EXCEPT AS NOTED.
ALL SIGNS WITH FLUORESCENT ORANGE BACKGROUND TO USE TYPE VIII RETROREFLECTIVE SHEETING.
ALL OTHER SIGNS TO USE TYPE IX RETROREFLECTIVE SHEETING.

REV.	DATE	REVISION DESCRIPTION
6	8-2018	REVISED POST REQUIREMENTS AND SHEETING TYPE.
5	8-2015	UPDATED PER MUTCD AND FORM 816 JAN 2015 REVISION.
4	6-2012	REVISED NOTE #1 TO REFERENCE "O.S.T.A."
3	4-2012	REVISED NEW SIGNAL SIGN(S) TO CONFORM TO 2009 MUTCD.
2	2-2011	MINOR REVISIONS.
1	3-2010	REMOVED OBSOLETE SIGNS (50-5925, 50-5935).

THE INFORMATION, INCLUDING ESTIMATED QUANTITIES OF WORK, SHOWN ON THESE SHEETS IS BASED ON LIMITED INVESTIGATIONS BY THE STATE AND IS IN NO WAY WARRANTED TO INDICATE THE CONDITIONS OF ACTUAL QUANTITIES OF WORK WHICH WILL BE REQUIRED.

Plotted Date: 8/10/2018

NOT TO SCALE

STATE OF CONNECTICUT
DEPARTMENT OF TRANSPORTATION

Filename: TR-1220_01_1_2018.dgn Model: TR-1220_01

SUBMITTED BY: NAME/DATE/TIME: Mark F. Makuch, P.E. 2018.08.17 09:11:08-04'00'

APPROVED BY: NAME/DATE/TIME: Mark F. Carlino, P.E. 2018.08.21 07:49:34-04'00'

CTDOT STANDARD SHEET

OFFICE OF ENGINEERING

STANDARD SHEET TITLE:

SIGNS FOR CONSTRUCTION AND PERMIT OPERATIONS

STANDARD SHEET NO.: TR-1220_01

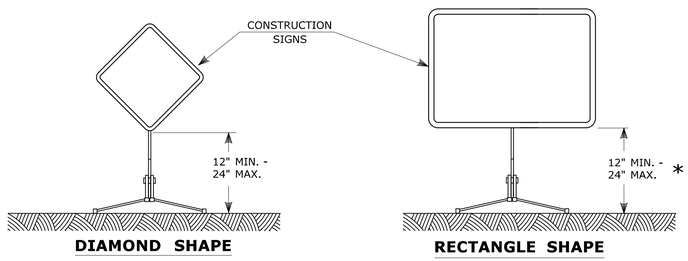

PORTABLE CONSTRUCTION SIGNS

NOTES FOR PORTABLE SIGN SUPPORTS:

1. SIGNS AND THEIR PORTABLE SUPPORTS SHALL CONFORM TO THE REQUIREMENTS OF NCHRP REPORT 350 (TL-3) OR THE AASHTO MASH FOR CATEGORY 2 DEVICES AND THE LATEST EDITION OF THE MUTCD.
2. MOUNTING HEIGHT OF SIGNS SHALL BE A MINIMUM OF 12" AND A MAXIMUM OF 24". SIGNS SHALL BE MOUNTED HIGHER AS NEEDED TO MEET FIELD CONDITIONS OR AS DIRECTED BY THE ENGINEER.
3. THE ENGINEER RESERVES THE RIGHT TO REJECT ANY SUPPORT DEEMED UNSUITABLE FOR THE PURPOSE INTENDED.
4. PORTABLE SIGN SUPPORTS SHALL BE STABILIZED IN A MANNER THAT WILL NOT AFFECT THEIR COMPLIANCE WITH NCHRP REPORT 350 (TL-3) OR THE AASHTO MASH FOR CATEGORY 2 DEVICES.
5. PORTABLE CONSTRUCTION SIGN SUPPORTS SHOULD NOT BE USED FOR DURATION OF MORE THAN 3 DAYS EXCEPT FOR R9-8 THROUGH R9-11a SERIES, R11 SERIES, W1-6 THROUGH W1-8 SERIES, M4-10, AND E5-1. SEE STANDARD SHEET TR-1220_01 - "SIGNS FOR CONSTRUCTION AND PERMIT OPERATIONS" FOR SIGN DETAILS.

* FOR E5-1 (EXIT SIGNS) USE MIN 48".

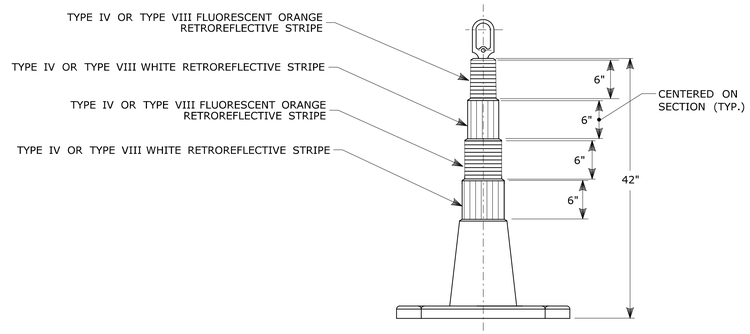

42" TRAFFIC CONE

NOTES:

1. TRAFFIC CONES SHALL CONFORM TO THE REQUIREMENTS OF NCHRP REPORT 350 (TL-3) OR THE AASHTO MASH FOR CATEGORY 1 DEVICES AND THE LATEST EDITION OF THE MUTCD.
2. IF RUBBER CONES ARE USED, THEY SHALL HAVE INTERIOR RIBS FOR RIGIDITY.
3. IF PLASTIC CONES ARE USED, THEY SHALL BE COLOR IMPREGNATED.
4. THE ENGINEER RESERVES THE RIGHT TO REJECT ANY CONE DEEMED UNSUITABLE FOR THE PURPOSE INTENDED.
5. THE ENTIRE AREA OF FLUORESCENT ORANGE AND WHITE STRIPES SHALL BE RETROREFLECTIVE SHEETING AS REQUIRED IN THE SPECIFICATIONS.
6. THE SECTIONS OF CONES NOT COVERED WITH RETROREFLECTIVE STRIPES SHALL BE ORANGE.

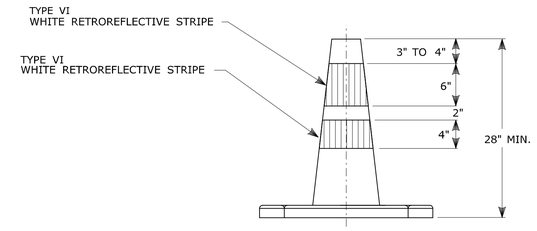

TRAFFIC CONE

NOTES:

1. TRAFFIC CONES SHALL CONFORM TO THE REQUIREMENTS OF NCHRP REPORT 350 (TL-3) OR THE AASHTO MASH FOR CATEGORY 1 DEVICES AND THE LATEST EDITION OF THE MUTCD.
2. IF RUBBER CONES ARE USED, THEY SHALL HAVE INTERIOR RIBS FOR RIGIDITY.
3. IF PLASTIC CONES ARE USED, THEY SHALL BE COLOR IMPREGNATED.
4. THE ENGINEER RESERVES THE RIGHT TO REJECT ANY CONE DEEMED UNSUITABLE FOR THE PURPOSE INTENDED.
5. THE ENTIRE AREA OF WHITE STRIPES SHALL BE RETROREFLECTIVE SHEETING AS REQUIRED IN THE SPECIFICATIONS.
6. TRAFFIC CONES NOT USED AT NIGHT MAY UTILIZE TYPE III SHEETING.
7. THE SECTIONS OF CONES NOT COVERED WITH RETROREFLECTIVE STRIPES SHALL BE ORANGE.

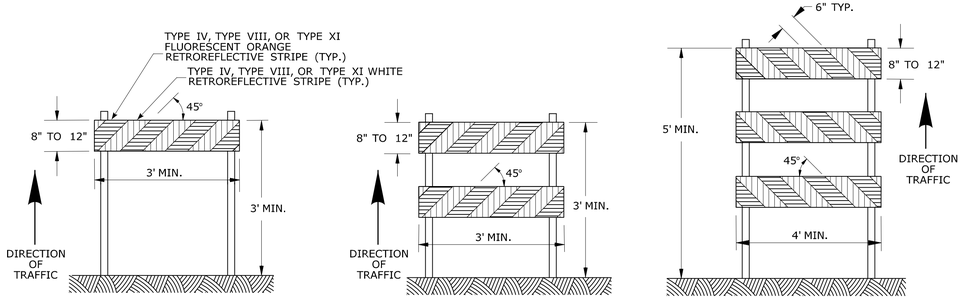

CONSTRUCTION BARRICADES

NOTES:

1. CONSTRUCTION BARRICADES SHALL CONFORM TO THE REQUIREMENTS OF NCHRP REPORT 350 (TL-3) OR THE AASHTO MASH AND THE LATEST EDITION OF THE MUTCD.
2. MARKINGS FOR BARRICADE RAILS SHALL BE ALTERNATE FLUORESCENT ORANGE AND WHITE STRIPES SLOPING DOWNWARD IN THE DIRECTION TRAFFIC IS TO PASS. 6" WIDE STRIPES SHALL BE USED.
3. THE ENTIRE AREA OF FLUORESCENT ORANGE AND WHITE STRIPES SHALL BE RETROREFLECTIVE SHEETING AS REQUIRED IN THE SPECIFICATIONS. THE SIDES OF BARRICADES FACING TRAFFIC SHALL HAVE RETROREFLECTIVE RAIL FACES.
4. THE ENGINEER RESERVES THE RIGHT TO REJECT ANY BARRICADE DEEMED UNSUITABLE FOR THE PURPOSE INTENDED.
5. CORNERS OF BARRICADE RAILS SHALL BE ROUNDED.
6. SIGNS MAY ONLY BE INSTALLED ON TYPE III BARRICADES AND SHALL BE PLACED SO AS TO COVER NO MORE THAN ONE BARRICADE RAIL.

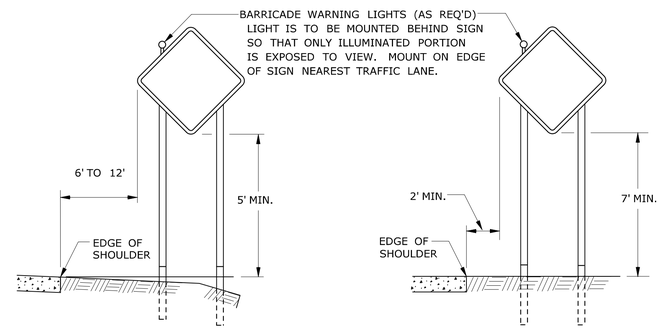

PLACEMENT OF CONSTRUCTION SIGNS
TYPICAL LONG TERM INSTALLATION

NOTES:

SUPPORTS SHALL BE METAL SIGN POSTS AND HAVE BREAK-AWAY FEATURES.

REFER TO STANDARD SHEETS:
TR-1208_01 - "SIGN PLACEMENT AND RETROREFLECTIVE STRIP DETAILS."
TR-1208_02 - "METAL SIGN POSTS AND SIGN MOUNTING DETAILS."

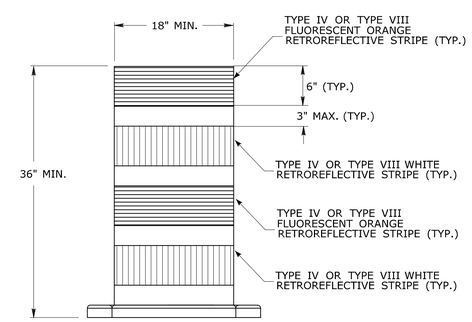

TRAFFIC DRUM
FRONT VIEW

NOTES:

1. TRAFFIC DRUM SHALL CONFORM TO THE REQUIREMENTS OF NCHRP REPORT 350 (TL-3) OR THE AASHTO MASH FOR CATEGORY 1 DEVICES AND THE LATEST EDITION OF THE MUTCD.
2. THE ENGINEER RESERVES THE RIGHT TO REJECT ANY DRUM DEEMED UNSUITABLE FOR THE PURPOSE INTENDED.
3. THE ENTIRE AREA OF FLUORESCENT ORANGE AND WHITE STRIPES SHALL BE RETROREFLECTIVE SHEETING AS REQUIRED IN THE SPECIFICATIONS.
4. THE SECTIONS OF DRUMS NOT COVERED WITH RETROREFLECTIVE STRIPES SHALL BE ORANGE.

REV.	DATE	REVISION DESCRIPTION
3	8-2018	UPDATED SHEETING TYPE AND COLOR.
2	8-2015	UPDATED PER MUTCD AND FORM 816 JAN 2015 REVISION.
1	2-2011	MINOR REVISIONS.

THE INFORMATION, INCLUDING ESTIMATED QUANTITIES OF WORK, SHOWN ON THESE SHEETS IS BASED ON LIMITED INVESTIGATIONS BY THE STATE AND IS IN NO WAY WARRANTED TO INDICATE THE CONDITIONS OF ACTUAL QUANTITIES OF WORK WHICH WILL BE REQUIRED.

Plotted Date: 8/10/2018

NOT TO SCALE

STATE OF CONNECTICUT
DEPARTMENT OF TRANSPORTATION

Filename: TR-1220_02_3_2018.dgn Model: TR-1220_02

SUBMITTED BY: NAME/DATE/TIME: Mark F. Makuch, P.E. 2018.08.17 09:12:43-04'00'
APPROVED BY: NAME/DATE/TIME: Mark F. Carlino, P.E. 2018.08.21 07:49:51-04'00'

CTDOT STANDARD SHEET

OFFICE OF ENGINEERING

STANDARD SHEET TITLE:
CONSTRUCTION SIGN SUPPORTS AND CHANNELIZING DEVICES

STANDARD SHEET NO.: TR-1220_02